THIS DRAWING IS UNPUBLISHED. RELEASED FOR PUBLICATION
© COPYRIGHT – BY TYCO ELECTRONICS CORPORATION. ALL RIGHTS RESERVED.

LOC	DIST
GP	00

REVISIONS

P	LTR	DESCRIPTION	DATE	DRN	APVD
	02	REVISED PER ECO-07-006407	21JUN07	JDP	CWR
	03	REVISED PER ECO-09-024927	07NOV09	KK	AEG

1. PREFIX AND SUFFIX NUMBERS MUST MATCH THOSE ON PLUG ASSEMBLY FOR PARTS TO MATE.
2. POLYESTER, FLAME RETARDANT, UL 94V-0 RATED, GLASS FILLED, BLACK.
3. 3.81µm [.000150] MIN BRIGHT TIN OVER 1.27µm [.000050] MIN NICKEL.
4. 1.27µm [.000050] MIN GOLD ON MATING SURFACE FOR A LENGTH OF 2.54 [.100] MIN, 3.81µm [.000150] MIN MATTE TIN ON OPPOSITE END FOR A LENGTH OF 3.81 [.150] MIN, BOTH OVER 1.27µm [.000050] MIN NICKEL ON ENTIRE CONTACT.
5. NUMBERS 13, 14, 15, 16 OR LETTER P TO APPEAR ON LOWER RIGHT REAR OF HOUSING IN AREA INDICATED.
6. OBSOLETE PARTS: OBSOLETE CIS STREAMLINING PER D.RENAUD/D.SINISI

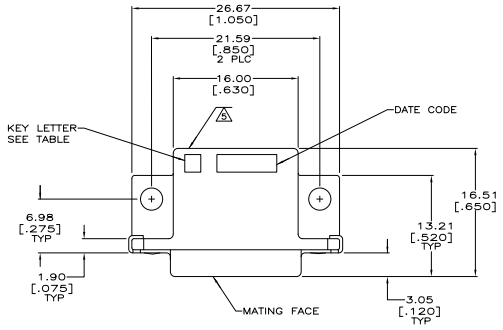

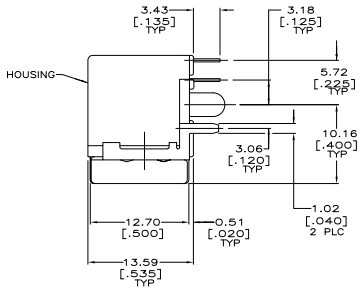

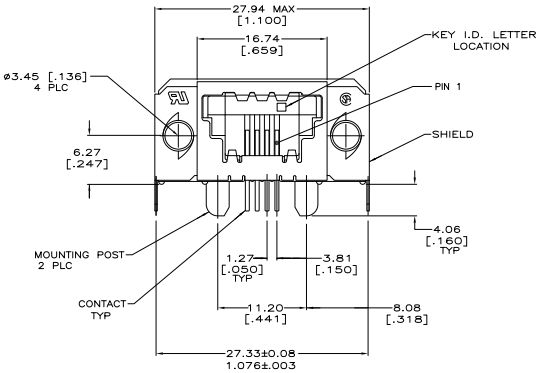

	KEY I.D. LETTER	PART NO
	E	5-1761190-1
OBSOLETE	B	2-1761190-1
6 OBSOLETE	A	~~1-1761190-1~~

THIS DRAWING IS A CONTROLLED DOCUMENT.

DIMENSIONS: INCHES

TOLERANCES UNLESS OTHERWISE SPECIFIED:
0 PLC ± –
1 PLC ± –
2 PLC ± –
3 PLC ± 0.38 [.010]
4 PLC ± –
ANGLES ± –

MATERIAL: HOUSING: 2 SHIELD: BRASS CONTACT: PHOS BRONZE

FINISH: SHIELD: 3 CONTACT: 4

DWN: B. MCMASTER 26APR04
CHK: C.ROHDE 26APR04
APVD: M. WALMSLEY 26APR04
PRODUCT SPEC: 108-2047
APPLICATION SPEC: 114-2081
WEIGHT: –
CUSTOMER DRAWING

Tyco Electronics Corporation
Harrisburg, PA 17105-3608

NAME: RECEPTACLE ASSEMBLY, 4 POSITION, SIDE ENTRY WITH GROUND, SDL

SIZE: A1 | CAGE CODE: 00779 | DRAWING NO: C-1761190 | RESTRICTED TO: –

SCALE: 4:1 | SHEET: 1 OF 1 | REV: 03

AMP 4805 REV 31MAR2000

Downloaded from Elcodis.com electronic components distributor