SPRING-LOADED CONNECTORS
.050" Grid Surface Mount, High Density
Single and Double Row Strips

Series 854...30-001101
855...30-001101

- Modular contacts for use on .050" grid, supplied in single and double row contact strips.
- Precision-machined piston / base and gold plated components assure a 1,000,000 min. cycle life.
- Pistons have a .0275" mid stroke & .055" max stroke.
- Low resistance, high current contacts are rated at 2 amps continuous, 3 amps peak.
- High temperature thermoplastic insulators are suitable for surface mount processes.
- 854 & 855 series contact strips are designed for manual placement onto .040" Ø solder pads.

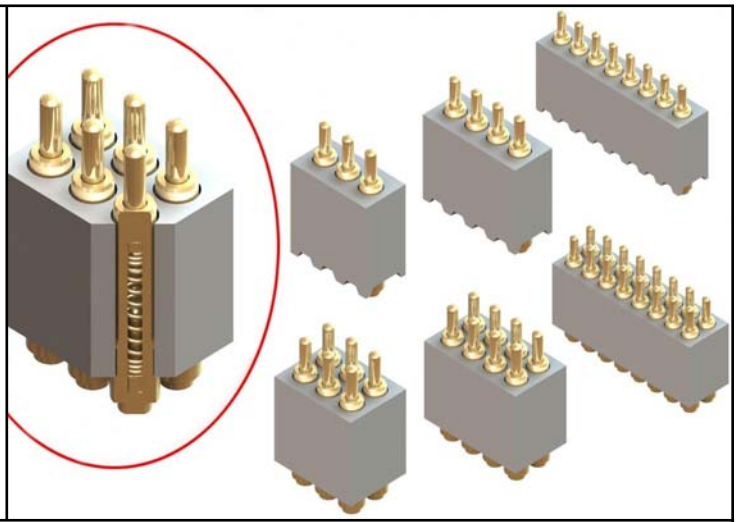

Single Row Series 854

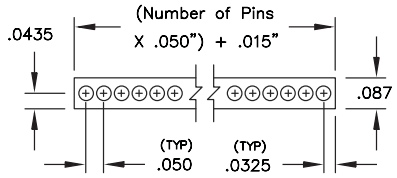

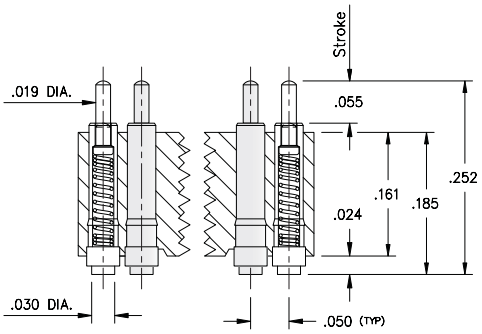

Double Row Series 855

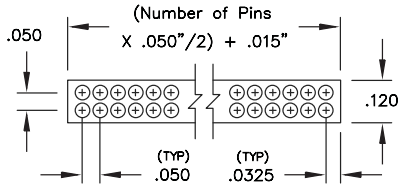

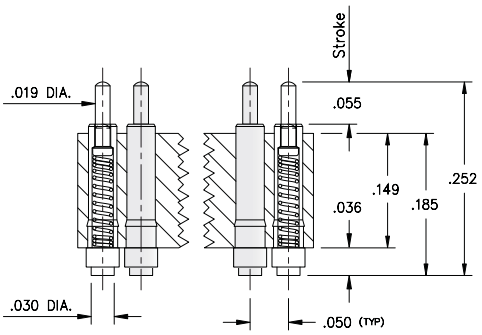

Ordering Information

Series 854	Single Row Surface Mount
854-22-0_ _-30-001101	
Specify # of pins →	02-20

Series 855	Double Row Surface Mount
855-22-0_ _-30-001101	
Specify # of pins →	04-40

For Electrical, Mechanical & Enviromental Data, See pg. 4.1

For RoHS compliance select ◇ plating code.

Technical Specifications

Materials:

Contact piston & Base: Machined copper alloy plated 20µ" gold over 100µ" nickel.
Spring: Beryllium copper plated 10µ" gold
Insulator: High temp. thermoplastic rated UL94 V-0

Mechanical:

Spring force @ initial height (A): 25 grams
Spring force @ mid stroke (B/2): 60 grams
Durability: 1,000,000 cycles min.

Electrical:

Voltage rating: 100Vrms/150Vdc
Current rating: 2A (continous), 3A (peak) per contact
Contact resistance: 20mΩ max.
Insulation resistance: 10,000MΩ min.
Dielectric strength: 700Vrms min.
Capacitance: 1pF max.

RoHS 2002/95/EC

Downloaded from Elcodis.com electronic components distributor