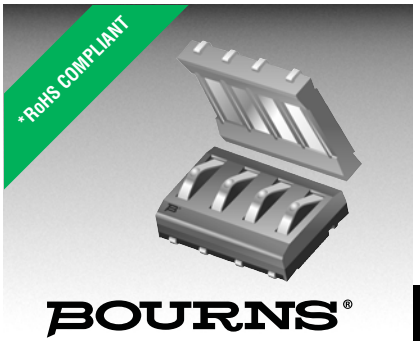

Features

- Low profile
- Rugged design
- Vertical or horizontal entry
- Tape & reel packaging available
- RoHS compliant* - see processing information on lead free surface mount components
- For applications/processing guidelines, click here

70AD/Male - Modular Contact

Materials & Finishes

Insulator.....Glass reinforced thermoplastic, UL 94V-0 rated, black
Contact..... Copper alloy
Finish
Underplating .....Nickel
Contact Area..... Gold
Termination .....Tin alloy (meets MIL-STD-202, method 208)

Operating Characteristics

Electrical
Current Rating..... DC 3 A/contact
Voltage Rating.....DC 30 V
Contact Resistance ..... 25 mΩ max.
Dielectric Voltage.....AC 500 V
Insulating Resistance..... 500 MΩ min.
Operating Temperature ..... -55 °C to 125 °C
Mechanical
Vibration.....10-55 Hz, 0.06 inches D.A.
Shock..... 50 G, 11 ms
Normal Force .....100 grams min. at a working height of 0.51 mm (0.020 in.)
Durability.....5,000 cycles

Patent No. 5,378,160.

How to Order

70AD J - 3 - M L 0 G

Model
Terminal Style
J = SMT
H = Through-hole
Number of Contacts
2 through 6
Gender
M = Male
Height
L = Low Profile
Options
0 = Standard
1 = Locator Pins (J style only)
Packaging Option
__ = Tube (240/N pcs. or 240 contacts per tube)
G = Embossed Tape (500 pcs. per reel)

Number of Contacts	Dimension A	Dimension B
2	7.7 (.303)	5.11 (.201)
3	11.7 (.461)	9.11 (.359)
4	15.7 (.618)	13.11 (.516)
5	19.7 (.776)	17.11 (.674)
6	23.7 (.933)	21.11 (.831)

Product Dimensions

70ADJ

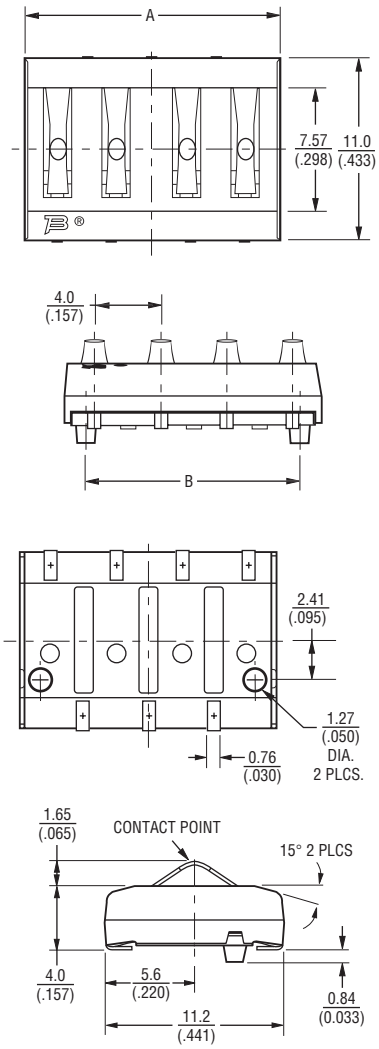

RECOMMENDED PWB MOUNTING PATTERN

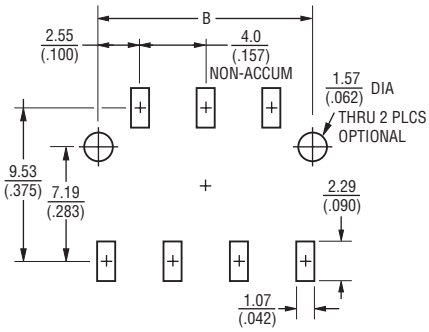

70ADH

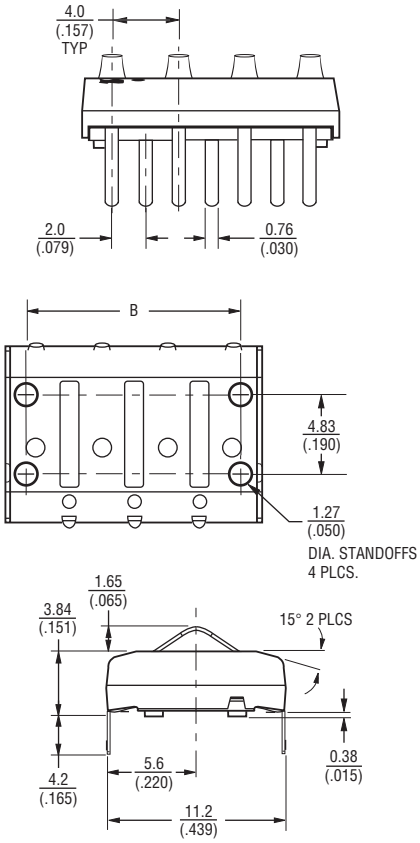

RECOMMENDED PWB PCB HOLE PATTERN

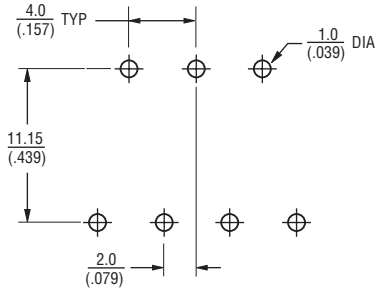

TOLERANCES: 0.3 (.012) UNLESS OTHERWISE NOTED

DIMENSIONS: MM (INCHES)

*RoHS Directive 2002/95/EC Jan 27 2003 including Annex.
Specifications are subject to change without notice.
Customers should verify actual device performance in their specific applications.

Downloaded from Elcodis.com electronic components distributor

Packaging Specifications

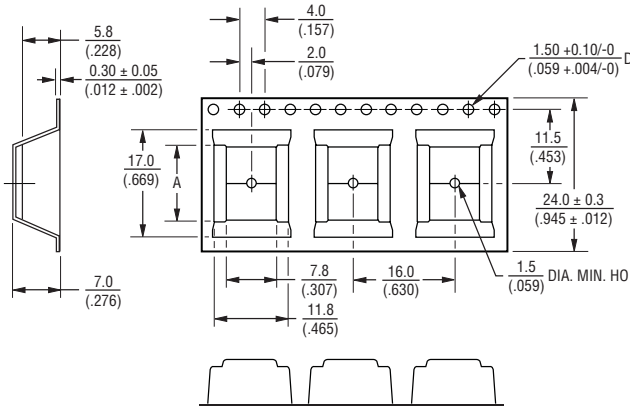

No. of Contacts	Dimension A
2	7.4 (.291)
3	11.7 (.461)
4	16.7 (.657)

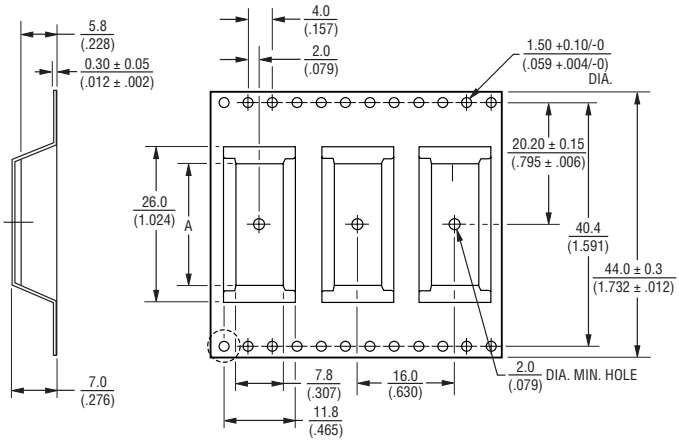

No. of Contacts	Dimension A
5	18.87 (.743)
6	25.70 (1.012)

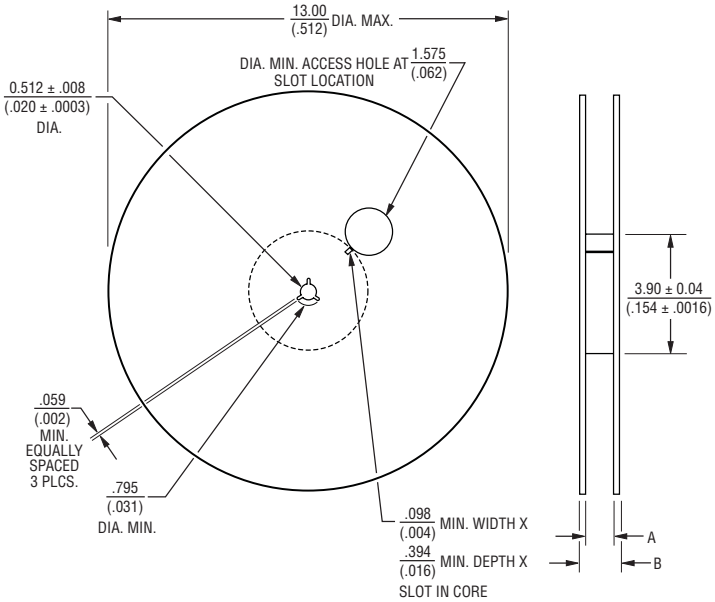

No. of Contacts	Dimension A	Dimension B
2	.961 (.038)	1.197 (.047)
3	.961 (.038)	1.197 (.047)
4	.961 (.038)	1.197 (.047)
5	1.765 (.069)	1.98 (.078)
6	1.765 (.069)	1.98 (.078)

DIMENSIONS: MM (INCHES)

Specifications are subject to change without notice.
Customers should verify actual device performance in their specific applications.

Downloaded from Elcodis.com electronic components distributor