REVISIONS				
LTR	DESCRIPTION	DATE	DWN	APVD
D	REV PER EC OL30-0233-97	12-9-97	JH	RS

1. BULK KITS CONSIST OF BAGS WHICH CONTAIN EQUAL QUANTITIES OF RECEPTACLE HOUSINGS AND POSITION LOCKS.

2. RECEPTACLE HOUSINGS AND POSITION LOCKS MAY BE ORDERED SEPARATELY.
   RECEPTACLE HOUSING P/N: 794152-1
   POSITION LOCK P/N: 794145-2

3. TERMINAL MUST BE INSERTED INTO RECEPTACLE HOUSING SO THAT THE TOP OF THE WIRE AND INSULATION CRIMPS FACE THE INTERIOR OF THE HOUSING. INSTALL POSITION LOCK AFTER FULLY SEATING ALL TERMINATED AMP-DUAC™ SOCKET CONTACTS AND KEYING RECEPTACLES. POSITION LOCK MAY BE INSTALLED IN EITHER SIDE OF THE RECEPTACLE HOUSING.

4. DIMENSIONS IN BRACKETS ARE IN INCHES.

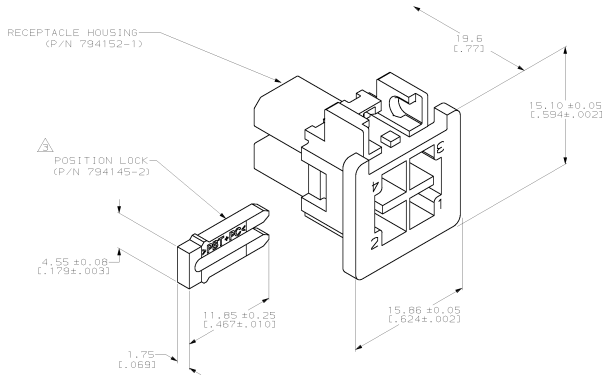

794318-1
PART NUMBER

THIS DRAWING IS A CONTROLLED DOCUMENT.

DIMENSIONS: mm
UNLESS OTHERWISE SPECIFIED:
± PLC ±-
± PLC ±0.25[.010]
± PLC ±0.13[.005]
± PLC ±-
± PLC ±-
ANGLES ±-
MATERIAL: FBT, UL 94V-0, NATURAL
FINISH: -

DR	R. VESTAL	9-09-97
CK	R. SWING	9-09-97
APVD	R. CASH	9-09-97
PRODUCT SPEC	108-1646	
APPLICATION SPEC	114-6067	
WEIGHT	-	

CUSTOMER DRAWING

AMP
AMP Incorporated
Harrisburg, PA 17105-3608

NAME
KIT, BULK, RECEPTABLE HOUSING AND POSITION LOCK, 4 CIRCUIT, AMP-DUAC/PL™ POWER CONNECTOR

SIZE	CAGE CODE	DRAWING NO	REVISION
A1	00779	C-794318	-

SCALE 4:1 SHEET 1 OF 1 REV D

METRIC

AMP 4805 REV 27.XA86

08-DEC-97 13:54:07 amp18726 /home/amp18726/ec233-97

Downloaded from Elcodis.com electronic components distributor