THIS DRAWING IS UNPUBLISHED. RELEASED FOR PUBLICATION 20
© COPYRIGHT 20 BY TYCO ELECTRONICS CORPORATION. ALL INTERNATIONAL RIGHTS RESERVED.

LOC	DIST
GP	00

REVISIONS

	LTR	DESCRIPTION	DATE	DWN	APVD
	F	REDRAWN PER ECO-10-006839	01APR2010	CJV	CWR
	G	REVISED PER ECO-10-011726	16JUN2010	CJV	CWR

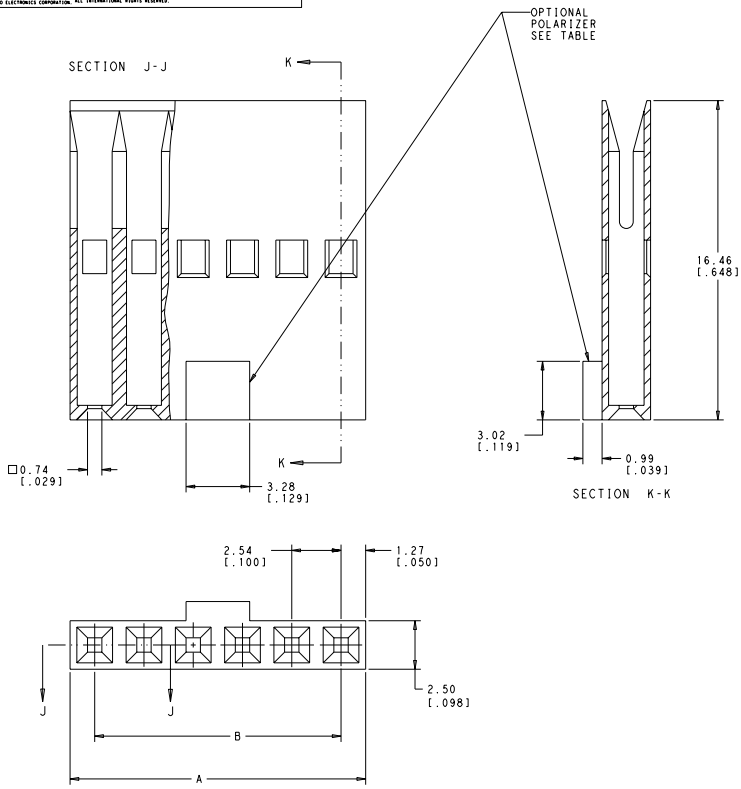

1. POLYAMIDE, UL94-V0, BLUE.
2. OBOLETE PARTS: OBSOLETE CIS STREAMLINING PER D. RENAUD/D. SINISI.

	B	A	POLARIZED	NO. OF POSITIONS	T&B CATALOG NO. (REF)	PART NUMBER
	66.04[2.600]	68.58[2.700]	YES	27	FP-2700SP	5-1437251-9
	66.04[2.600]	68.58[2.700]	NO	27	FP-2700S	5-1437251-8
	63.50[2.500]	66.04[2.600]	YES	26	FP-2600SP	5-1437251-4
OBSOLETE	63.50[2.500]	66.04[2.600]	NO	26	FP-2600S	5-1437251-3
	60.96[2.400]	63.50[2.500]	YES	25	FP-2500SP	4-1437251-6
OBSOLETE	60.96[2.400]	63.50[2.500]	NO	25	FP-2500S	4-1437251-5
	58.42[2.300]	60.96[2.400]	YES	24	FP-2400SP	4-1437251-1
	58.42[2.300]	60.96[2.400]	NO	24	FP-2400S	4-1437251-0
	55.88[2.200]	58.42[2.300]	YES	23	FP-2300SP	3-1437251-3
	55.88[2.200]	58.42[2.300]	NO	23	FP-2300S	3-1437251-2
	53.34[2.100]	55.88[2.200]	YES	22	FP-2200SP	2-1437251-7
OBSOLETE	53.34[2.100]	55.88[2.200]	NO	22	FP-2200S	2-1437251-6
	50.80[2.000]	53.34[2.100]	YES	21	FP-2100SP	2-1437251-1
OBSOLETE	50.80[2.000]	53.34[2.100]	NO	21	FP-2100S	2-1437251-0
	48.26[1.900]	50.80[2.000]	YES	20	FP-2000SP	1-1437251-6
	48.26[1.900]	50.80[2.000]	NO	20	FP-2000S	1-1437251-5
	45.72[1.800]	48.26[1.900]	YES	19	FP-1900SP	1437251-9
	45.72[1.800]	48.26[1.900]	NO	19	FP-1900S	1437251-8
OBSOLETE	43.18[1.700]	45.72[1.800]	YES	18	FP-1800SP	1437251-4
	43.18[1.700]	45.72[1.800]	NO	18	FP-1800S	1437251-3
	40.64[1.600]	43.18[1.700]	YES	17	FP-1700SP	9-1437250-5
OBSOLETE	40.64[1.600]	43.18[1.700]	NO	17	FP-1700S	9-1437250-4
	38.10[1.500]	40.64[1.600]	YES	16	FP-1600SP	9-1437250-0
OBSOLETE	38.10[1.500]	40.64[1.600]	NO	16	FP-1600S	8-1437250-9
	35.56[1.400]	38.10[1.500]	YES	15	FP-1500SP	8-1437250-2
OBSOLETE	35.56[1.400]	38.10[1.500]	NO	15	FP-1500S	8-1437250-1
	33.02[1.300]	35.56[1.400]	YES	14	FP-1400SP	7-1437250-7
	33.02[1.300]	35.56[1.400]	NO	14	FP-1400S	7-1437250-6
	30.48[1.200]	33.02[1.300]	YES	13	FP-1300SP	6-1437250-9
OBSOLETE	30.48[1.200]	33.02[1.300]	NO	13	FP-1300S	6-1437250-8
	27.94[1.100]	30.48[1.200]	YES	12	FP-1200SP	6-1437250-4
	27.94[1.100]	30.48[1.200]	NO	12	FP-1200S	6-1437250-3
	25.40[1.000]	27.94[1.100]	YES	11	FP-1100SP	5-1437250-6
OBSOLETE	25.40[1.000]	27.94[1.100]	NO	11	FP-1100S	5-1437250-5
OBSOLETE	22.86[0.900]	25.40[1.000]	YES	10	FP-1000SP	5-1437250-1
	22.86[0.900]	25.40[1.000]	NO	10	FP-1000S	5-1437250-0
	20.32[0.800]	22.86[0.900]	YES	9	FP-0900SP	4-1437250-4
OBSOLETE	20.32[0.800]	22.86[0.900]	NO	9	FP-0900S	4-1437250-3
	17.78[0.700]	20.32[0.800]	YES	8	FP-0800SP	3-1437250-9
OBSOLETE	17.78[0.700]	20.32[0.800]	NO	8	FP-0800S	3-1437250-8
	15.24[0.600]	17.78[0.700]	YES	7	FP-0700SP	3-1437250-1
OBSOLETE	15.24[0.600]	17.78[0.700]	NO	7	FP-0700S	3-1437250-0
	12.70[0.500]	15.24[0.600]	YES	6	FP-0600SP	2-1437250-6
OBSOLETE	12.70[0.500]	15.24[0.600]	NO	6	FP-0600S	2-1437250-5
OBSOLETE	10.16[0.400]	12.70[0.500]	YES	5	FP-0500SP	1-1437250-9
OBSOLETE	10.16[0.400]	12.70[0.500]	NO	5	FP-0500S	1-1437250-8
	7.62[0.300]	10.16[0.400]	YES	4	FP-0400SP	1-1437250-4
OBSOLETE	7.62[0.300]	10.16[0.400]	NO	4	FP-0400S	1-1437250-3
	5.08[0.200]	7.62[0.300]	YES	3	FP-0300SP	1437250-7
OBSOLETE	5.08[0.200]	7.62[0.300]	NO	3	FP-0300S	1437250-6
	2.54[0.100]	5.08[0.200]	YES	2	FP-0200SP	1437250-3
	2.54[0.100]	5.08[0.200]	NO	2	FP-0200S	1437250-2
	78.74[3.100]	81.28[3.200]	YES	32	FP-3200SP	8-1437251-8
OBSOLETE	78.74[3.100]	81.28[3.200]	NO	32	FP-3200S	8-1437251-7
	76.20[3.000]	78.74[3.100]	YES	31	FP-3100SP	8-1437251-1
	76.20[3.000]	78.74[3.100]	NO	31	FP-3100S	8-1437251-0
	73.66[2.900]	76.20[3.000]	YES	30	FP-3000SP	7-1437251-7
	73.66[2.900]	76.20[3.000]	NO	30	FP-3000S	7-1437251-6
	71.12[2.800]	73.66[2.900]	YES	29	FP-2900SP	7-1437251-1
	71.12[2.800]	73.66[2.900]	NO	29	FP-2900S	7-1437251-0
	68.58[2.700]	71.12[2.800]	YES	28	FP-2800SP	6-1437251-7
	68.58[2.700]	71.12[2.800]	NO	28	FP-2800S	6-1437251-6

	B	A	POLARIZED	NO. OF POSITIONS	T&B CATALOG NO. (REF)	PART NUMBER

THIS DRAWING IS CONSIDERED TO BE THE MASTER FOR ELECTRONIC REPRODUCTION. ANY HARD COPY MUST BE VERIFIED AGAINST THE CURRENT REVISION.

DIMENSIONS: mm[INCH]

TOLERANCES UNLESS OTHERWISE SPECIFIED:
0 PLC ±:
1 PLC ±:
2 PLC ±0.13[.005]
3 PLC ±:
4 PLC ±:
ANGLES ±:

MATERIAL 1

FINISH :

DWN C. VALENTIN 01APR2010
CHK C. BOHDE 01APR2010
APVD C. BOHDE 01APR2010

PRODUCT SPEC -
APPLICATION SPEC -
WEIGHT -

Tyco Electronics
Tyco Electronics
Harrisburg, PA 17105-3608

NAME FLEXPAC SYSTEM SOCKET HOUSING
-
-

SIZE	CAGE CODE	DRAWING NO	RESTRICTED TO
A1	00779	C-1437250-2	-

CUSTOMER DRAWING SCALE 10:1 SHEET 1 OF 2 REV G

4005 (2/99)
Pro/ENGINEER DRAWING

Downloaded from Elcodis.com electronic components distributor

THIS DRAWING IS UNPUBLISHED. RELEASED FOR PUBLICATION 20
© COPYRIGHT 20 BY TYCO ELECTRONICS CORPORATION. ALL INTERNATIONAL RIGHTS RESERVED.

LOC	DIST
GP	00

REVISIONS

P	LTR	DESCRIPTION	DATE	DWN	APVD
	-	SEE SHEET 1	-	-	-

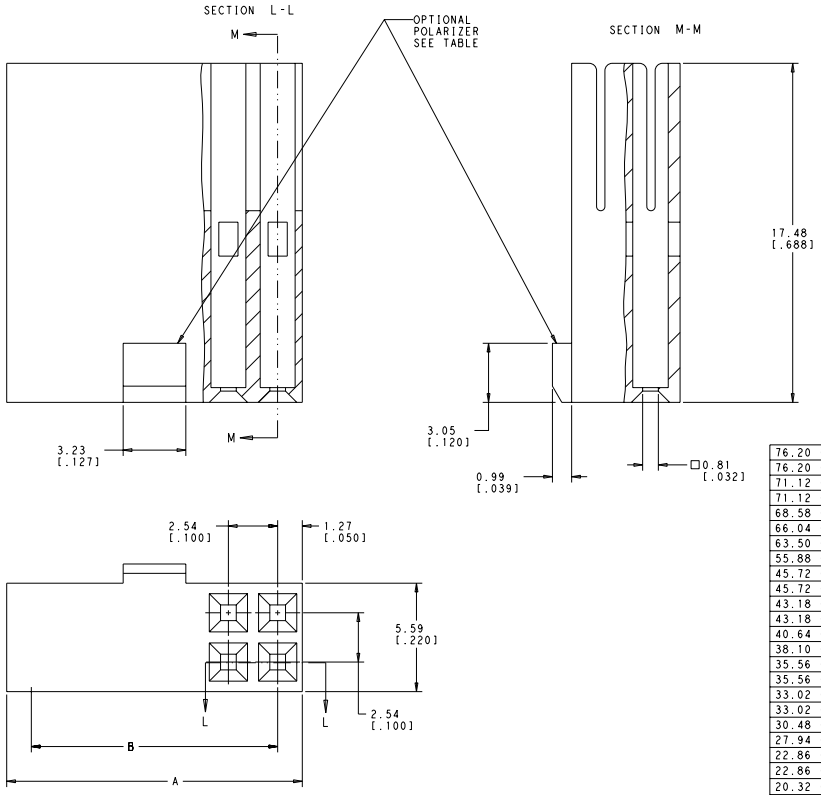

	B	A	POLARIZED	NO. OF POSITIONS	T&B CATALOG NO. (REF.)	PART NUMBER
	76.20 (3.000)	78.74 (3.100)	NO	62	FP-6200DM	6-1437252-8
	76.20 (3.000)	78.74 (3.100)	YES	62	FP-6200DPM	3-1437252-1
	71.12 (2.800)	73.66 (2.900)	YES	58	FP-5800DPM	2-1437252-6
	71.12 (2.800)	73.66 (2.900)	NO	58	FP-5800DM	2-1437252-4
	68.58 (2.700)	71.12 (2.800)	YES	56	FP-5600DPM	2-1437252-2
	66.04 (2.600)	68.58 (2.700)	YES	54	FP-5400DPM	1-1437252-9
	63.50 (2.500)	66.04 (2.600)	YES	52	FP-5200DPM	1-1437252-6
	55.88 (2.200)	58.42 (2.300)	YES	46	FP-4600DPM	1437252-9
	45.72 (1.800)	48.26 (1.900)	YES	38	FP-3800DPM	9-1437251-9
	45.72 (1.800)	48.26 (1.900)	NO	38	FP-3800DM	9-1437251-7
	43.18 (1.700)	45.72 (1.800)	YES	36	FP-3600DPM	6-1437252-9
	43.18 (1.700)	45.72 (1.800)	NO	36	FP-3600DM	6-1437252-7
	40.64 (1.600)	43.18 (1.700)	YES	34	FP-3400DPM	9-1437251-3
	38.10 (1.500)	40.64 (1.600)	YES	32	FP-3200DPM	8-1437251-6
	35.56 (1.400)	38.10 (1.500)	NO	30	FP-3000DM	6-1437252-6
	35.56 (1.400)	38.10 (1.500)	YES	30	FP-3000DPM	7-1437251-5
	33.02 (1.300)	35.56 (1.400)	YES	28	FP-2800DPM	6-1437251-5
	33.02 (1.300)	35.56 (1.400)	NO	28	FP-2800DM	6-1437251-3
	30.48 (1.200)	33.02 (1.300)	YES	26	FP-2600DPM	5-1437251-2
	27.94 (1.100)	30.48 (1.200)	YES	24	FP-2400DPM	3-1437251-9
	22.86 (0.900)	25.40 (1.000)	NO	20	FP-2000DM	1-1437251-3
	22.86 (0.900)	25.40 (1.000)	YES	20	FP-2000DPM	1437249-6
	20.32 (0.800)	22.86 (0.900)	YES	18	FP-1800DPM	1437251-2
	17.78 (0.700)	20.32 (0.800)	YES	16	FP-1600DPM	8-1437250-8
	15.24 (0.600)	17.78 (0.700)	NO	14	FP-1400DM	7-1437250-4
	12.70 (0.500)	15.24 (0.600)	YES	12	FP-1200DPM	6-1437250-2
2 OBSOLETE	10.16 (0.400)	12.70 (0.500)	YES	10	FP-1000DPM	1437249-1
	7.62 (0.300)	10.16 (0.400)	NO	8	FP-0800DM	3-1437250-6
	2.54 (0.100)	5.08 (0.200)	YES	4	FP-0400DPM	1-1437250-2

THIS DRAWING IS CONSIDERED THE PRIMARY DOCUMENT FOR THE PRODUCT DESCRIBED HEREIN. ANY DEVIATION MUST BE APPROVED BY THE CUSTOMER.

DIMENSIONS: mm[INCH]

TOLERANCES UNLESS OTHERWISE SPECIFIED:
0 PLC ±-
1 PLC ±-
2 PLC ±0.13[.005]
3 PLC ±-
4 PLC ±-
ANGLES ±-

MATERIAL -
FINISH -

DWN VALENTIN 07APR2010
CHK C ROHDE 07APR2010
APVD C ROHDE 07APR2010
PRODUCT SPEC -
APPLICATION SPEC -
WEIGHT -

Tyco Electronics
Tyco Electronics
Harrisburg, PA 17105-3608

NAME FLEXPAC SYSTEM SOCKET HOUSING

SIZE A1 | CAGE CODE 00779 | DRAWING NO C-1437250-2 | RESTRICTED TO -

CUSTOMER DRAWING | SCALE 10:1 | SHEET 2 OF 2 | REV G

4005-12/09

Downloaded from Elcodis.com electronic components distributor