THIS DRAWING IS UNPUBLISHED. RELEASED FOR PUBLICATION 20
© COPYRIGHT 20 BY TYCO ELECTRONICS CORPORATION. ALL RIGHTS RESERVED.

LOC	DIST
F	00

REVISIONS

P	LTR	DESCRIPTION	DATE	DWN	APVD
	D	REDESSINE AVEC PROE	20JUN2006	RP	JPP

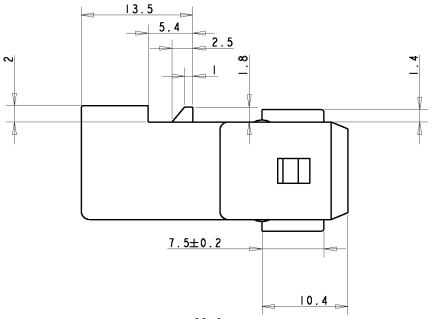

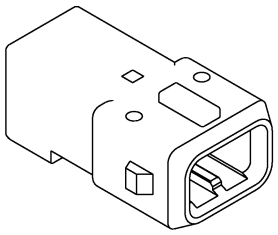

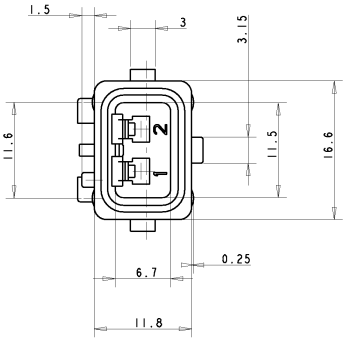

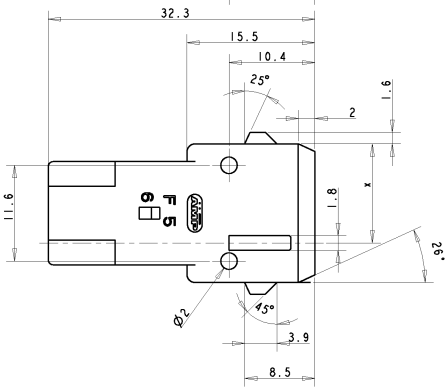

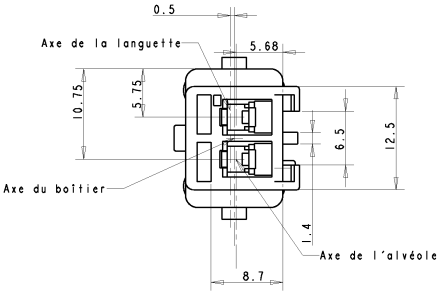

DETROMPAGE		
COULEUR	" X "	REFERENCE
NOIR	AUCUN DETROMPAGE	1-144545-0
MARRON	4.8	1-144545-1
ROUGE	13.8	1-144545-2
JAUNE	3	1-144545-4
VERT	6.6	1-144545-5
GRIS	8.4	1-144545-8
BLEU	10.2	1-144545-6
BLANC	12	1-144545-9
VIOLET	AUCUN DETROMPAGE	1-144545-7

REFERENCE REPRESENTEE: 1-144545-9

THIS DRAWING IS A CONTROLLED DOCUMENT FOR TYCO ELECTRONICS CORPORATION. IT IS STRICTLY NOT TO BE CHANGED UNLESS THE CONTROLLING CORPORATE ORGANIZATION SHOULD BE CONTACTED FOR THE LATEST REVISION

DIMENSIONS: mm

TOLERANCES UNLESS OTHERWISE SPECIFIED:
0 PLC ±
1 PLC ±0.3
2 PLC ±
3 PLC ±
4 PLC ±
ANGLES ±5°
FINISH -

MATERIAL: PA 6.6 GF20

DWN: R PATIN 20-JUN-06
CHK: JP PICAUD 20-JUN-06
APVD: I DAHER 20-JUN-06
PRODUCT SPEC: -
APPLICATION SPEC: -
WEIGHT: -

tyco Electronics
TYCO ELECTRONICS France SAS
BP 30039, 95301 CERGY-PONTOISE Cedex

NAME: PORTE-LANGUETTE ETANCHE 2 VOIES MIC IV

SIZE	CAGE CODE	DRAWING NO	RESTRICTED TO
A2	00779	C-144545	-

CUSTOMER DRAWING
SCALE 3:1 SHEET 1 OF 1 REV D

AMP 1471-9 REV 31MAR2000

Downloaded from Elcodis.com electronic components distributor