THIS DRAWING IS UNPUBLISHED. RELEASED FOR PUBLICATION 26-
© COPYRIGHT 26 BY TYCO ELECTRONICS CORPORATION. ALL RIGHTS RESERVED.

LOC	DIST
CM	00

REVISIONS

P	LTR	DESCRIPTION	DATE	DWN	APVD
	B	REVISED PER 0G3B-251-E4	12JUL04	KW	CJ

1. APPLICABLE CONTACT P/N: 170539, 170360, 170361, 170362.
2. DIMENSIONS IN BRACKETS ARE IN INCHES.
3. RECOMMENDED PANEL THICKNESS TO BE 0.8-2.0 [.031-.0793].
4. HOUSING INSERTION INTO THE PANEL CUT OUT MUST BE IN THE SAME DIRECTION AS THE PUNCH.)

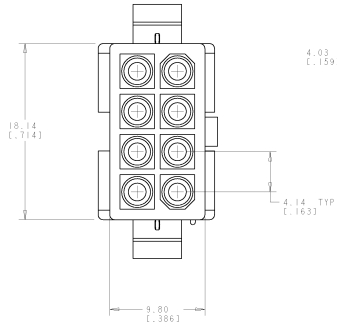

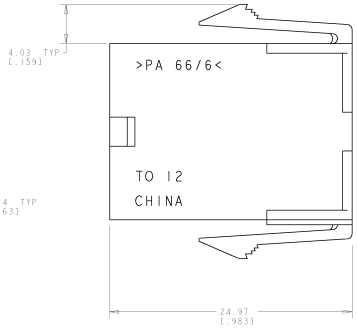

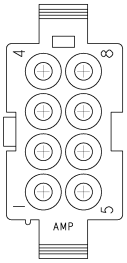

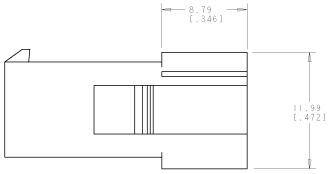

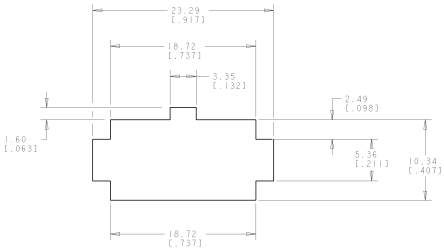

REECOMMENDED PANEL CUT OUT 3
SCALE 4:1

794941-1	
PART NUMBER	

THIS DRAWING IS A CONVERSION FROM THE PRODUCT SPECIFICATION DRAWING 0G3B-251-E4 AND MEETS ALL REQUIREMENTS.

DWN	23-JULY-2001	tyco Electronics — Tyco Electronics, Harrisburg, PA 17105-3608
CHK	WHITAKER 23-JULY-2001	
DES	JONES 23-JULY-2001	NAME: CAP, 8 CIRCUIT, SEALED APPLICATION, MINI UNIVERSAL MATE-N-LOK TM
APVD	JONES 23-JULY-2001	
PRODUCT SPEC	-	
APPLICATION SPEC	-	
WEIGHT	-	

DIMENSIONS: mm[INCHES]
TOLERANCES UNLESS OTHERWISE SPECIFIED:
.X PLC ±
.XX PLC ±
.XXX PLC ±0.13 [.005]
.XXXX PLC ±
ANGLES ±0° 30'
FINISH -
MATERIAL: NYLON,UL94V-0 NATURAL

METRIC

CUSTOMER DRAWING

SIZE	CAGE CODE	DRAWING NO	RESTRICTED TO
A	00779	C-794941	-

SCALE 5:1 SHEET 1 OF 1 REV B

AMP 4005 REV 31MAR2000
PrintENGINEER DRAWING

Downloaded from Elcodis.com electronic components distributor