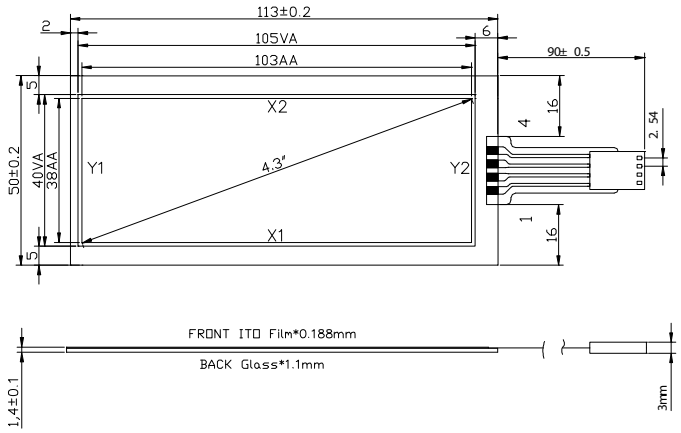


| PIN | OUT |
|---|---|
| 1 | Y1 |
| 2 | X1 |
| 3 | Y2 |
| 4 | X2 |

Notes:

1.Type: Film to Glass
2.Operating Voltage: ≤10V
3. Operation Temperature : -10℃～60℃
Storage Temperature : -20℃～70℃
4. Life Time : >1, 000, 000 times
5.Connect Material: FPC
6.Response Time: ≤10ms
7.Linearity: ≤1.5 %
8.Transmittance: ≥85%
9.Surface Hardness ≥3H(pencil)
10. Operation force: 20g～80g
11.Resistance: X : 130Ω ～ 200Ω
Y: 850Ω ～1460Ω

| Newhaven Display | | DRAWN: | DATE: | VERSION: | UNIT: | TOLERANCE: | SCALE: | REV: |
|---|---|---|---|---|---|---|---|---|
| | NHD-TS-12864C-4043003 | | 06/04/08 | 1.0 | MM | ±0.2 | 1:1 | |

Downloaded from Elcodis.com electronic components distributor