PHE450

RoHS Compliant

- **Double metallized film pulse capacitor, polypropylene dielectric**
- **According to IEC 60384-17 Grade 1.1**
- **Small sizes**
- **Replacing PHE427, PHE428**

TYPICAL APPLICATIONS

High frequency applications with high current stress, such as deflection circuits in TV-sets, protection circuits in SMPS and in electronic ballasts.

CONSTRUCTION

Polypropylene dielectric with double metallized polyester film as electrodes. Encapsulation in self-extinguishing material meeting the requirements of UL 94V-0.

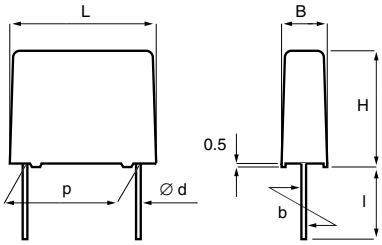

p	d	std l	max l	b
7.5 ± 0.4	0.6	5^{-1}	30	± 0.4
10.0 ± 0.4	0.6	5^{-1}	30	± 0.4
15.0 ± 0.4	0.8	6^{-1}	30	± 0.4
22.5 ± 0.4	0.8	6^{-1}	30	± 0.4
27.5 ± 0.4	0.8	6^{-1}	30	± 0.4
37.5 ± 0.5	1.0	6^{-1}	30	± 0.7

Three different winding constructions are used, depending on voltage and lead spacing. They are specified in the article table.

1 section construction

2 section construction

3 section construction

TECHNICAL DATA

Rated voltage U_R, VDC	250	400	630	1000	1600	2000	2500
Rated voltage U_R, VAC	180	250	300/400	375/600	650	700	900
Capacitance range	330pF–10µF	330pF–5.6µF	330pF–3.3µF	330pF–1.8µF	2.7nF–0.82µF	1.0nF–0.56µF	1nF–0.22µF

Capacitance values In accordance with IEC E12 series.

Capacitance tolerance ±5% standard. Other tolerances on request

Category temperature range –55° C to +105° C

Rated temperature +85° C

Voltage derating The rated voltage is decreased with 1.3% / ° C between +85° C and +105° C

Climatic category 55/105/56/B

Test voltage between terminals The 100 % factory test is carried out at 1.6 x U_R VDC

Insulation resistance Measured at 23° C, 100 VDC 60s for U_R < 500 VDC and at 500 VDC for $U_R \geq$ 500 VDC
Between terminals:
C ≤ 0.33 µF: ≥ 100 000 MΩ
C > 0.33 µF: ≥ 30 000 s
Between terminals and case:
≥ 100 000 MΩ

Dissipation factor tanδ Maximum values at 23°C

	C ≤ 0.1 µF	0.1 µF < C ≤ 1.0 µF	C > 1.0 µF
1 kHz	0.03 %	0.03 %	0.03 %
10 kHz	0.04 %	0.06 %	–
100 kHz	0.15 %	–	–

Inductance Approximately 6 nH/cm for the total length of capacitor winding and the leads.

Pulse rise time The capacitors can withstand an unlimited number of pulses with a dU/dt according to the article table. For peak to peak voltages lower than the rated voltage ($U_{PP} < U_R$), the specified dU/dt can be multiplied by U_R/U_{PP}.

ENVIRONMENTAL TEST DATA

According to IEC 60384-17, Grade 1.1 and Quality tests and requirements for Pulse Capacitors on page 107.

Downloaded from Elcodis.com electronic components distributor

DERATING OF U_{RMS} VS FREQUENCY, +85°C AMBIENT TEMPERATURE AND 10°C INTERNAL HEATING, TYPICAL VALUES

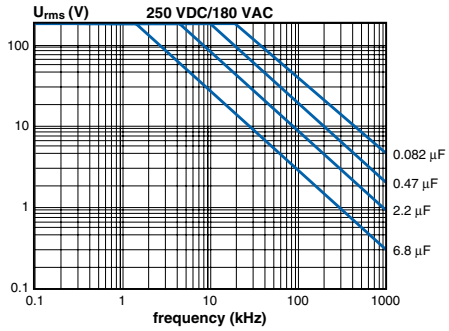

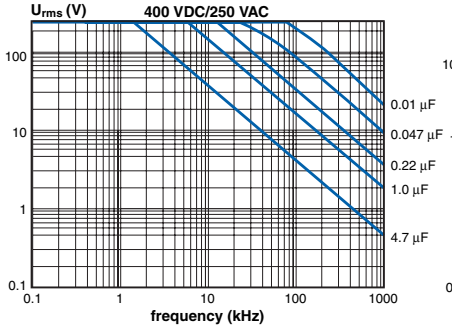

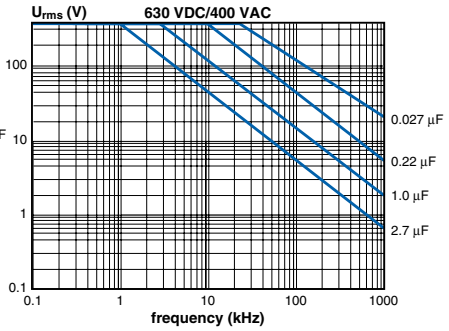

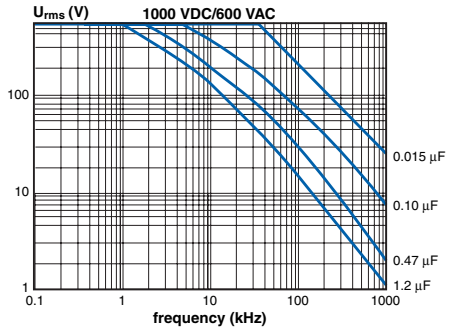

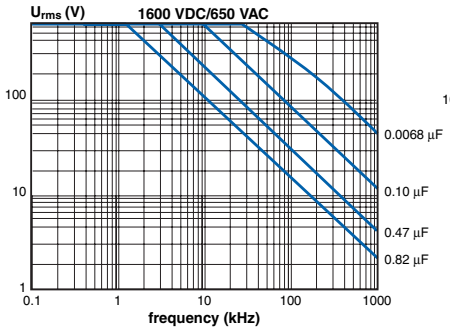

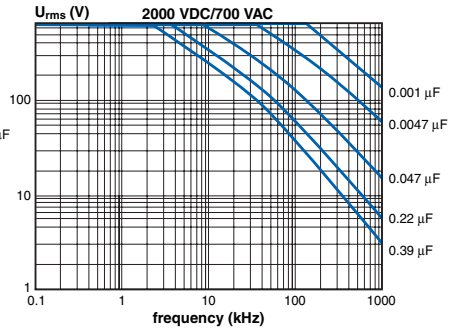

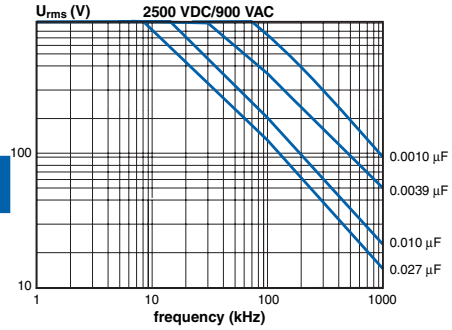

More simulation possibilities in PCCAD. See page 106.

ORDERING INFORMATION

The article code for the standard part is given in the article table.
For other options, see page 12.

MARKING

- RIFA
- Article code
- Rated capacitance according to IEC 60062
- Rated voltage
- Capacitance tolerance code
- Manufacturing code (year, month)

Downloaded from Elcodis.com electronic components distributor

ARTICLE TABLE

250 VDC /180 VAC (1 section winding construction)

LEAD SPACING 7.5 MM

Capacitance µF	Box code	Max dimensions in mm B	H	L	Max dU/dt V/µs	Rthha °C/W 85 °C 0.2 m/s	Article code
0.00033	K01	4.0	8.0	10.0	2000	160	PHE450HK3330JR05
0.00039	K01	4.0	8.0	10.0	2000	160	PHE450HK3390JR05
0.00047	K01	4.0	8.0	10.0	2000	160	PHE450HK3470JR05
0.00056	K01	4.0	8.0	10.0	2000	160	PHE450HK3560JR05
0.00068	K01	4.0	8.0	10.0	2000	160	PHE450HK3680JR05
0.00082	K01	4.0	8.0	10.0	2000	160	PHE450HK3820JR05
0.0010	K01	4.0	8.0	10.0	2000	160	PHE450HK4100JR05
0.0012	K01	4.0	8.0	10.0	2000	160	PHE450HK4120JR05
0.0015	K01	4.0	8.0	10.0	2000	160	PHE450HK4150JR05
0.0018	K01	4.0	8.0	10.0	2000	160	PHE450HK4180JR05
0.0022	K01	4.0	8.0	10.0	2000	160	PHE450HK4220JR05
0.0027	K01	4.0	8.0	10.0	2000	160	PHE450HK4270JR05
0.0033	K01	4.0	8.0	10.0	2000	160	PHE450HK4330JR05
0.0039	K01	4.0	8.0	10.0	2000	160	PHE450HK4390JR05
0.0047	K01	4.0	8.0	10.0	1400	160	PHE450HK4470JR05
0.0056	K01	4.0	8.0	10.0	1400	160	PHE450HK4560JR05
0.0068	K01	4.0	8.0	10.0	1400	160	PHE450HK4680JR05
0.0082	K01	4.0	8.0	10.0	1400	160	PHE450HK4820JR05
0.010	K01	4.0	8.0	10.0	1200	160	PHE450HK5100JR05
0.012	K01	4.0	8.0	10.0	1200	160	PHE450HK5120JR05
0.015	K01	4.0	8.0	10.0	800	160	PHE450HK5150JR05
0.018	K01	4.0	8.0	10.0	800	160	PHE450HK5180JR05
0.022	K01	4.0	8.0	10.0	800	160	PHE450HK5220JR05
0.027	K03	5.0	11.0	10.0	800	160	PHE450HK5270JR05
0.033	K03	5.0	11.0	10.0	800	160	PHE450HK5330JR05
0.039	K03	5.0	11.0	10.0	800	160	PHE450HK5390JR05
0.047	K03	5.0	11.0	10.0	800	160	PHE450HK5470JR05
0.056	K03	5.0	11.0	10.0	800	160	PHE450HK5560JR05
0.068	K04	6.0	12.0	10.5	800	160	PHE450HK5680JR05

LEAD SPACING 10 MM

Capacitance µF	Box code	Max dimensions in mm B	H	L	Max dU/dt V/µs	Rthha °C/W 85 °C 0.2 m/s	Article code
0.0010	A01	4.0	9.0	13.0	1400	142	PHE450HA4100JR05
0.0012	A01	4.0	9.0	13.0	1400	142	PHE450HA4120JR05
0.0015	A01	4.0	9.0	13.0	1400	142	PHE450HA4150JR05
0.0018	A01	4.0	9.0	13.0	1400	142	PHE450HA4180JR05
0.0022	A01	4.0	9.0	13.0	1400	142	PHE450HA4220JR05
0.0027	A01	4.0	9.0	13.0	1400	142	PHE450HA4270JR05
0.0033	A01	4.0	9.0	13.0	1400	142	PHE450HA4330JR05
0.0039	A01	4.0	9.0	13.0	1400	142	PHE450HA4390JR05
0.0047	A01	4.0	9.0	13.0	1400	142	PHE450HA4470JR05
0.0056	A01	4.0	9.0	13.0	1400	142	PHE450HA4560JR05
0.0068	A01	4.0	9.0	13.0	1400	142	PHE450HA4680JR05
0.0082	A01	4.0	9.0	13.0	1200	142	PHE450HA4820JR05
0.010	A01	4.0	9.0	13.0	1200	142	PHE450HA5100JR05
0.012	A01	4.0	9.0	13.0	1200	142	PHE450HA5120JR05
0.015	A01	4.0	9.0	13.0	1200	142	PHE450HA5150JR05
0.018	A01	4.0	9.0	13.0	1100	142	PHE450HA5180JR05
0.022	A01	4.0	9.0	13.0	1100	142	PHE450HA5220JR05
0.027	A01	4.0	9.0	13.0	1100	142	PHE450HA5270JR05
0.033	A01	4.0	9.0	13.0	700	142	PHE450HA5330JR05
0.039	A01	4.0	9.0	13.0	700	142	PHE450HA5390JR05
0.047	A01	4.0	9.0	13.0	700	142	PHE450HA5470JR05
0.056	A02	4.5	10.5	13.0	700	122	PHE450HA5560JR05
0.068	A02	4.5	10.5	13.0	700	122	PHE450HA5680JR05
0.082	A03	5.0	11.0	13.0	700	116	PHE450HA5820JR05
0.100	A04	6.0	12.0	13.0	700	105	PHE450HA6100JR05
0.120	A04	6.0	12.0	13.0	700	105	PHE450HA6120JR05

250 VDC /180 VAC (1 section)

LEAD SPACING 15 MM

Capacitance µF	Box code	Max dimensions in mm B	H	L	Max dU/dt V/µs	Rthha °C/W 85 °C 0.2 m/s	Article code
0.047	B04	5.5	10.5	18.0	1000	100	PHE450HB5470JR06
0.056	B04	5.5	10.5	18.0	1000	100	PHE450HB5560JR06
0.068	B04	5.5	10.5	18.0	1000	100	PHE450HB5680JR06
0.082	B04	5.5	10.5	18.0	600	101	PHE450HB5820JR06
0.10	B04	5.5	10.5	18.0	600	100	PHE450HB6100JR06
0.12	B04	5.5	10.5	18.0	600	99	PHE450HB6120JR06
0.15	B05	5.5	12.5	18.0	600	85	PHE450HB6150JR06
0.18	B10	6.5	12.5	18.0	600	83	PHE450HB6180JR06
0.22	B06	7.5	14.5	18.0	600	74	PHE450HB6220JR06
0.27	B06	7.5	14.5	18.0	600	73	PHE450HB6270JR06
0.33	B12	8.0	15.0	18.0	600	67	PHE450HB6330JR06
0.39	B11	8.5	16.0	18.0	600	65	PHE450HB6390JR06
0.47	B14	9.5	17.5	18.0	600	60	PHE450HB6470JR06

LEAD SPACING 22.5 MM

Capacitance µF	Box code	Max dimensions in mm B	H	L	Max dU/dt V/µs	Rthha °C/W 85 °C 0.2 m/s	Article code
0.18	D13	6.5	14.5	26.0	600	58	PHE450HD6180JR06L2
0.22	D13	6.5	14.5	26.0	400	60	PHE450HD6220JR06L2
0.27	D13	6.5	14.5	26.0	400	59	PHE450HD6270JR06L2
0.33	D13	6.5	14.5	26.0	400	58	PHE450HD6330JR06L2
0.39	D17	7.0	16.5	26.0	400	54	PHE450HD6390JR06L2
0.47	D17	7.0	16.5	26.0	400	53	PHE450HD6470JR06L2
0.56	D15	9.0	18.5	26.0	400	49	PHE450HD6560JR06L2
0.68	D15	9.0	18.5	26.0	400	47	PHE450HD6680JR06L2
0.82	D18	10.5	19.0	26.0	400	43	PHE450HD6820JR06L2
1.0	D16	11.0	21.5	26.0	400	40	PHE450HD7100JR06L2
1.2	D20	13.5	23.0	26.0	400	38	PHE450HD7120JR06L2
1.5	D20	13.5	23.0	26.0	400	36	PHE450HD7150JR06L2
1.8	D19	15.5	24.5	26.0	400	36	PHE450HD7180JR06L2

LEAD SPACING 27.5 MM

Capacitance µF	Box code	Max dimensions in mm B	H	L	Max dU/dt V/µs	Rthha °C/W 85 °C 0.2 m/s	Article code
0.82	F11	10.5	20.5	31.5	300	38	PHE450HF6820JR06L2
1.0	F11	10.5	20.5	31.5	300	38	PHE450HF7100JR06L2
1.2	F11	10.5	20.5	31.5	300	37	PHE450HF7120JR06L2
1.2	F17	21.0	12.5	31.5	300	37	PHE450HT7120JR06L2
1.5	F12	11.5	22.5	31.5	300	34	PHE450HF7150JR06L2
1.8	F03	13.5	23.0	31.5	300	32	PHE450HF7180JR06L2
2.2	F13	14.5	24.5	31.5	300	31	PHE450HF7220JR06L2
2.2	F19	27.5	16.0	31.5	300	31	PHE450HT7220JR06L2
2.7	F14	17.5	28.0	31.5	300	27	PHE450HF7270JR06L2
3.3	F15	19.0	29.0	31.5	300	25	PHE450HF7330JR06L2
3.9	F16	21.0	30.0	31.5	300	23	PHE450HF7390JR06L2
3.9	F18	31.0	19.0	31.5	300	23	PHE450HT7390JR06L2

LEAD SPACING 37.5 MM

Capacitance µF	Box code	Max dimensions in mm B	H	L	Max dU/dt V/µs	Rthha °C/W 85 °C 0.2 m/s	Article code
1.8	R05	13.0	24.0	41.0	200	28	PHE450HR7180JR06L2
2.2	R05	13.0	24.0	41.0	200	28	PHE450HR7220JR06L2
2.7	R05	13.0	24.0	41.0	200	27	PHE450HR7270JR06L2
3.3	R04	15.0	26.0	41.0	200	25	PHE450HR7330JR06L2
3.9	R02	16.5	32.0	41.0	200	22	PHE450HR7390JR06L2
4.7	R02	16.5	32.0	41.0	200	22	PHE450HR7470JR06L2
5.6	R03	19.0	36.0	41.0	200	18	PHE450HR7560JR06L2
6.8	R06	21.0	38.0	41.0	200	17	PHE450HR7680JR06L2
8.2	R08	28.0	43.0	41.0	200	17	PHE450HR7820JR06L2
10	R08	28.0	43.0	41.0	200	17	PHE450HR8100JR06L2

Downloaded from Elcodis.com electronic components distributor

ARTICLE TABLE

400 VDC / 250 VAC (1 section)

LEAD SPACING 7.5 MM

Capacitance µF	Box code	Max dimensions in mm B	H	L	Max dU/dt V/µs	Rthha °C/W 85 °C 0.2 m/s	Article code
0.00033	K01	4.0	8.0	10.0	2000	160	PHE450KK3330JR05
0.00039	K01	4.0	8.0	10.0	2000	160	PHE450KK3390JR05
0.00047	K01	4.0	8.0	10.0	2000	160	PHE450KK3470JR05
0.00056	K01	4.0	8.0	10.0	2000	160	PHE450KK3560JR05
0.00068	K01	4.0	8.0	10.0	2000	160	PHE450KK3680JR05
0.00082	K01	4.0	8.0	10.0	2000	160	PHE450KK3820JR05
0.0010	K01	4.0	8.0	10.0	2000	160	PHE450KK4100JR05
0.0012	K01	4.0	8.0	10.0	2000	160	PHE450KK4120JR05
0.0015	K01	4.0	8.0	10.0	2000	160	PHE450KK4150JR05
0.0018	K01	4.0	8.0	10.0	2000	160	PHE450KK4180JR05
0.0022	K01	4.0	8.0	10.0	2000	160	PHE450KK4220JR05
0.0027	K01	4.0	8.0	10.0	2000	160	PHE450KK4270JR05
0.0033	K01	4.0	8.0	10.0	2000	160	PHE450KK4330JR05
0.0039	K01	4.0	8.0	10.0	2000	160	PHE450KK4390JR05
0.0047	K01	4.0	8.0	10.0	1400	160	PHE450KK4470JR05
0.0056	K01	4.0	8.0	10.0	1400	160	PHE450KK4560JR05
0.0068	K01	4.0	8.0	10.0	1400	160	PHE450KK4680JR05
0.0082	K01	4.0	8.0	10.0	1400	160	PHE450KK4820JR05
0.010	K01	4.0	8.0	10.0	1200	160	PHE450KK5100JR05
0.012	K01	4.0	8.0	10.0	1200	160	PHE450KK5120JR05
0.015	K03	5.0	11.0	10.0	1200	160	PHE450KK5150JR05
0.018	K03	5.0	11.0	10.0	1200	160	PHE450KK5180JR05
0.022	K03	5.0	11.0	10.0	1200	160	PHE450KK5220JR05
0.027	K03	5.0	11.0	10.0	1200	160	PHE450KK5270JR05
0.033	K03	5.0	11.0	10.0	1200	160	PHE450KK5330JR05
0.039	K04	6.0	12.0	10.5	1200	160	PHE450KK5390JR05
0.047	K04	6.0	12.0	10.5	1200	160	PHE450KK5470JR05

LEAD SPACING 10 MM

Capacitance µF	Box code	Max dimensions in mm B	H	L	Max dU/dt V/µs	Rthha °C/W 85 °C 0.2 m/s	Article code
0.0010	A01	4.0	9.0	13.0	1400	142	PHE450KA4100JR05
0.0012	A01	4.0	9.0	13.0	1400	142	PHE450KA4120JR05
0.0015	A01	4.0	9.0	13.0	1400	142	PHE450KA4150JR05
0.0018	A01	4.0	9.0	13.0	1400	142	PHE450KA4180JR05
0.0022	A01	4.0	9.0	13.0	1400	142	PHE450KA4220JR05
0.0027	A01	4.0	9.0	13.0	1400	142	PHE450KA4270JR05
0.0033	A01	4.0	9.0	13.0	1400	142	PHE450KA4330JR05
0.0039	A01	4.0	9.0	13.0	1400	142	PHE450KA4390JR05
0.0047	A01	4.0	9.0	13.0	1400	142	PHE450KA4470JR05
0.0056	A01	4.0	9.0	13.0	1400	142	PHE450KA4560JR05
0.0068	A01	4.0	9.0	13.0	1400	142	PHE450KA4680JR05
0.0082	A01	4.0	9.0	13.0	1200	142	PHE450KA4820JR05
0.010	A01	4.0	9.0	13.0	1200	142	PHE450KA5100JR05
0.012	A01	4.0	9.0	13.0	1200	142	PHE450KA5120JR05
0.015	A01	4.0	9.0	13.0	1200	142	PHE450KA5150JR05
0.018	A01	4.0	9.0	13.0	1100	142	PHE450KA5180JR05
0.022	A01	4.0	9.0	13.0	1100	142	PHE450KA5220JR05
0.027	A01	4.0	9.0	13.0	1100	142	PHE450KA5270JR05
0.033	A02	4.5	10.5	13.0	1100	122	PHE450KA5330JR05
0.039	A03	5.0	11.0	13.0	1100	116	PHE450KA5390JR05
0.047	A04	6.0	12.0	13.0	1100	105	PHE450KA5470JR05
0.056	A04	6.0	12.0	13.0	1100	105	PHE450KA5560JR05

LEAD SPACING 15 MM

Capacitance µF	Box code	Max dimensions in mm B	H	L	Max dU/dt V/µs	Rthha °C/W 85 °C 0.2 m/s	Article code
0.033	B04	5.5	10.5	18.0	2500	100	PHE450KB5330JR06
0.039	B04	5.5	10.5	18.0	1000	100	PHE450KB5390JR06
0.047	B04	5.5	10.5	18.0	1000	100	PHE450KB5470JR06
0.056	B04	5.5	10.5	18.0	1000	100	PHE450KB5560JR06
0.068	B04	5.5	10.5	18.0	1000	100	PHE450KB5680JR06
0.082	B05	5.5	12.5	18.0	1000	99	PHE450KB5820JR06
0.10	B10	6.5	12.5	18.0	1000	85	PHE450KB6100JR06

400 VDC / 250 VAC (1 section)

LEAD SPACING 15 MM

Capacitance µF	Box code	Max dimensions in mm B	H	L	Max dU/dt V/µs	Rthha °C/W 85 °C 0.2 m/s	Article code
0.12	B06	7.5	14.5	18.0	1000	75	PHE450KB6120JR06
0.15	B06	7.5	14.5	18.0	1000	75	PHE450KB6150JR06
0.18	B12	8.0	15.0	18.0	1000	71	PHE450KB6180JR06
0.22	B14	9.5	17.5	18.0	1000	60	PHE450KB6220JR06
0.27	B14	9.5	17.5	18.0	1000	59	PHE450KB6270JR06

LEAD SPACING 22.5 MM

Capacitance µF	Box code	Max dimensions in mm B	H	L	Max dU/dt V/µs	Rthha °C/W 85 °C 0.2 m/s	Article code
0.12	D13	6.5	14.5	26.0	600	58	PHE450KD6120JR06L2
0.15	D13	6.5	14.5	26.0	600	58	PHE450KD6150JR06L2
0.18	D13	6.5	14.5	26.0	600	58	PHE450KD6180JR06L2
0.22	D17	7.0	16.5	26.0	600	52	PHE450KD6220JR06L2
0.27	D17	7.0	16.5	26.0	600	52	PHE450KD6270JR06L2
0.33	D15	9.0	18.5	26.0	600	48	PHE450KD6330JR06L2
0.39	D15	9.0	18.5	26.0	600	48	PHE450KD6390JR06L2
0.47	D18	10.5	19.0	26.0	600	45	PHE450KD6470JR06L2
0.56	D16	11.0	21.5	26.0	600	40	PHE450KD6560JR06L2
0.68	D20	13.5	23.0	26.0	600	35	PHE450KD6680JR06L2
0.82	D20	13.5	23.0	26.0	600	35	PHE450KD6820JR06L2
1.0	D19	15.5	24.5	26.0	600	33	PHE450KD7100JR06L2

LEAD SPACING 27.5 MM

Capacitance µF	Box code	Max dimensions in mm B	H	L	Max dU/dt V/µs	Rthha °C/W 85 °C 0.2 m/s	Article code
0.47	F11	10.5	20.5	31.5	500	38	PHE450KF6470JR06L2
0.56	F11	10.5	20.5	31.5	500	38	PHE450KF6560JR06L2
0.68	F11	10.5	20.5	31.5	500	38	PHE450KF6680JR06L2
0.68	F17	21.0	12.5	31.5	500	38	PHE450KT6680JR06L2
0.82	F12	11.5	22.5	31.5	500	34	PHE450KF6820JR06L2
1.0	F03	13.5	23.0	31.5	500	32	PHE450KF7100JR06L2
1.2	F13	14.5	24.5	31.5	500	30	PHE450KF7120JR06L2
1.5	F14	17.5	28.0	31.5	500	27	PHE450KF7150JR06L2
1.5	F19	27.5	16.0	31.5	500	27	PHE450KT7150JR06L2
1.8	F15	19.0	29.0	31.5	500	25	PHE450KF7180JR06L2
2.2	F16	21.0	30.0	31.5	500	24	PHE450KF7220JR06L2
2.2	F18	31.0	19.0	31.5	500	24	PHE450KT7220JR06L2

LEAD SPACING 37.5 MM

Capacitance µF	Box code	Max dimensions in mm B	H	L	Max dU/dt V/µs	Rthha °C/W 85 °C 0.2 m/s	Article code
1.0	R05	13.0	24.0	41.0	300	27	PHE450KR7100JR06L2
1.2	R05	13.0	24.0	41.0	300	27	PHE450KR7120JR06L2
1.5	R05	13.0	24.0	41.0	300	27	PHE450KR7150JR06L2
1.8	R04	15.0	26.0	41.0	300	25	PHE450KR7180JR06L2
2.2	R02	16.5	32.0	41.0	300	22	PHE450KR7220JR06L2
2.7	R02	16.5	32.0	41.0	300	22	PHE450KR7270JR06L2
3.3	R03	19.0	36.0	41.0	300	19	PHE450KR7330JR06L2
3.9	R03	19.0	36.0	41.0	300	19	PHE450KR7390JR06L2
4.7	R06	21.0	38.0	41.0	300	17	PHE450KR7470JR06L2
5.6	R08	28.0	43.0	41.0	300	17	PHE450KR7560JR06L2

630 VDC / 300 VAC (1 SECTION)

LEAD SPACING 7.5 MM

Capacitance µF	Box code	Max dimensions in mm B	H	L	Max dU/dt V/µs	Rthha °C/W 85 °C 0.2 m/s	Article code
0.00033	K01	4.0	8.0	10.0	2000	160	PHE450MK3330JR05
0.00039	K01	4.0	8.0	10.0	2000	160	PHE450MK3390JR05
0.00047	K01	4.0	8.0	10.0	2000	160	PHE450MK3470JR05
0.00056	K01	4.0	8.0	10.0	2000	160	PHE450MK3560JR05
0.00068	K01	4.0	8.0	10.0	2000	160	PHE450MK3680JR05
0.00082	K01	4.0	8.0	10.0	2000	160	PHE450MK3820JR05
0.0010	K01	4.0	8.0	10.0	2000	160	PHE450MK4100JR05
0.0012	K01	4.0	8.0	10.0	2000	160	PHE450MK4120JR05

EVOX RIFA

Downloaded from Elcodis.com electronic components distributor

ARTICLE TABLE

630 VDC / 300 VAC (1 SECTION)

LEAD SPACING 7.5 MM

Capacitance µF	Box code	Max dimensions in mm B	H	L	Max dU/dt V/µs	Rthha °C/W 85 °C 0.2 m/s	Article code
0.0015	K01	4.0	8.0	10.0	2000	160	PHE450MK4150JR05
0.0018	K01	4.0	8.0	10.0	2000	160	PHE450MK4180JR05
0.0022	K01	4.0	8.0	10.0	2000	160	PHE450MK4220JR05
0.0027	K01	4.0	8.0	10.0	2000	160	PHE450MK4270JR05
0.0033	K01	4.0	8.0	10.0	2000	160	PHE450MK4330JR05
0.0039	K01	4.0	8.0	10.0	2000	160	PHE450MK4390JR05
0.0047	K01	4.0	8.0	10.0	1400	160	PHE450MK4470JR05
0.0056	K01	4.0	8.0	10.0	1400	160	PHE450MK4560JR05
0.0068	K01	4.0	8.0	10.0	1400	160	PHE450MK4680JR05
0.0082	K01	4.0	8.0	10.0	1400	160	PHE450MK4820JR05
0.010	K03	5.0	11.0	10.0	1400	160	PHE450MK5100JR05
0.012	K03	5.0	11.0	10.0	1400	160	PHE450MK5120JR05
0.015	K03	5.0	11.0	10.0	1400	160	PHE450MK5150JR05
0.018	K03	5.0	11.0	10.0	1400	160	PHE450MK5180JR05
0.022	K04	6.0	12.0	10.5	1400	160	PHE450MK5220JR05

LEAD SPACING 10 MM

Capacitance µF	Box code	Max dimensions in mm B	H	L	Max dU/dt V/µs	Rthha °C/W 85 °C 0.2 m/s	Article code
0.0010	A01	4.0	9.0	13.0	1400	142	PHE450MA4100JR05
0.0012	A01	4.0	9.0	13.0	1400	142	PHE450MA4120JR05
0.0015	A01	4.0	9.0	13.0	1400	142	PHE450MA4150JR05
0.0018	A01	4.0	9.0	13.0	1400	142	PHE450MA4180JR05
0.0022	A01	4.0	9.0	13.0	1400	142	PHE450MA4220JR05
0.0027	A01	4.0	9.0	13.0	1400	142	PHE450MA4270JR05
0.0033	A01	4.0	9.0	13.0	1400	142	PHE450MA4330JR05
0.0039	A01	4.0	9.0	13.0	1400	142	PHE450MA4390JR05
0.0047	A01	4.0	9.0	13.0	1400	142	PHE450MA4470JR05
0.0056	A01	4.0	9.0	13.0	1400	142	PHE450MA4560JR05
0.0068	A01	4.0	9.0	13.0	1400	142	PHE450MA4680JR05
0.0082	A01	4.0	9.0	13.0	1200	142	PHE450MA4820JR05
0.010	A01	4.0	9.0	13.0	1200	142	PHE450MA5100JR05
0.012	A01	4.0	9.0	13.0	1200	142	PHE450MA5120JR05
0.015	A01	4.0	9.0	13.0	1200	142	PHE450MA5150JR05
0.018	A02	4.5	10.5	13.0	1200	122	PHE450MA5180JR05
0.022	A02	4.5	10.5	13.0	1200	122	PHE450MA5220JR05
0.027	A03	5.0	11.0	13.0	1200	116	PHE450MA5270JR05
0.033	A04	6.0	12.0	13.0	1200	105	PHE450MA5330JR05
0.039	A04	6.0	12.0	13.0	1200	105	PHE450MA5390JR05

630 VDC / 400 VAC (2 SECTION)

LEAD SPACING 15 MM

Capacitance µF	Box code	Max dimensions in mm B	H	L	Max dU/dt V/µs	Rthha °C/W 85 °C 0.2 m/s	Article code
0.010	B04	5.5	10.5	18.0	2500	99	PHE450MB5100JR06
0.012	B04	5.5	10.5	18.0	2500	99	PHE450MB5120JR06
0.015	B04	5.5	10.5	18.0	2500	100	PHE450MB5150JR06
0.018	B04	5.5	10.5	18.0	2500	100	PHE450MB5180JR06
0.022	B04	5.5	10.5	18.0	2500	100	PHE450MB5220JR06
0.027	B04	5.5	10.5	18.0	2500	100	PHE450MB5270JR06
0.033	B04	5.5	10.5	18.0	2500	100	PHE450MB5330JR06
0.039	B05	5.5	12.5	18.0	2500	90	PHE450MB5390JR06
0.047	B10	6.5	12.5	18.0	2500	85	PHE450MB5470JR06
0.056	B10	6.5	12.5	18.0	2500	85	PHE450MB5560JR06
0.068	B06	7.5	14.5	18.0	2500	75	PHE450MB5680JR06
0.082	B12	8.0	15.0	18.0	2500	72	PHE450MB5820JR06
0.10	B11	8.5	16.0	18.0	2500	70	PHE450MB6100JR06
0.12	B14	9.5	17.5	18.0	2500	61	PHE450MB6120JR06
0.15	B14	9.5	17.5	18.0	2500	61	PHE450MB6150JR06

630 VDC / 400 VAC (2 SECTION)

LEAD SPACING 22.5 MM

Capacitance µF	Box code	Max dimensions in mm B	H	L	Max dU/dt V/µs	Rthha °C/W 85 °C 0.2 m/s	Article code
0.033	D13	6.5	14.5	26.0	1800	58	PHE450MD5330JR06L2
0.039	D13	6.5	14.5	26.0	1800	58	PHE450MD5390JR06L2
0.047	D13	6.5	14.5	26.0	1800	58	PHE450MD5470JR06L2
0.056	D13	6.5	14.5	26.0	1800	58	PHE450MD5560JR06L2
0.068	D13	6.5	14.5	26.0	1800	59	PHE450MD5680JR06L2
0.082	D13	6.5	14.5	26.0	1800	59	PHE450MD5820JR06L2
0.10	D13	6.5	14.5	26.0	1800	59	PHE450MD6100JR06L2
0.12	D17	7.0	16.5	26.0	1800	55	PHE450MD6120JR06L2
0.15	D17	7.0	16.5	26.0	1800	55	PHE450MD6150JR06L2
0.18	D15	9.0	18.5	26.0	1800	50	PHE450MD6180JR06L2
0.22	D15	9.0	18.5	26.0	1800	50	PHE450MD6220JR06L2
0.27	D16	11.0	21.5	26.0	1800	45	PHE450MD6270JR06L2
0.33	D16	11.0	21.5	26.0	1800	45	PHE450MD6330JR06L2
0.39	D20	13.5	23.0	26.0	1800	40	PHE450MD6390JR06L2
0.47	D20	13.5	23.0	26.0	1800	40	PHE450MD6470JR06L2
0.56	D19	15.5	24.5	26.0	1800	34	PHE450MD6560JR06L2

LEAD SPACING 27.5 MM

Capacitance µF	Box code	Max dimensions in mm B	H	L	Max dU/dt V/µs	Rthha °C/W 85 °C 0.2 m/s	Article code
0.22	F11	10.5	20.5	31.5	1100	38	PHE450MF6220JR06L2
0.27	F11	10.5	20.5	31.5	1100	38	PHE450MF6270JR06L2
0.33	F11	10.5	20.5	31.5	1100	38	PHE450MF6330JR06L2
0.39	F11	10.5	20.5	31.5	1100	38	PHE450MF6390JR06L2
0.39	F17	21.0	12.5	31.5	1100	38	PHE450MT6390JR06L2
0.47	F12	11.5	22.5	31.5	1100	35	PHE450MF6470JR06L2
0.56	F03	13.5	23.0	31.5	1100	34	PHE450MF6560JR06L2
0.68	F13	14.5	24.5	31.5	1100	33	PHE450MF6680JR06L2
0.82	F14	17.5	28.0	31.5	1100	30	PHE450MF6820JR06L2
0.82	F19	27.5	16.0	31.5	1100	30	PHE450MT6820JR06L2
1.0	F14	17.5	28.0	31.5	1100	30	PHE450MF7100JR06L2
1.2	F16	21.0	30.0	31.5	1100	25	PHE450MF7120JR06L2
1.2	F18	31.0	19.0	31.5	1100	25	PHE450MT7120JR06L2

LEAD SPACING 37.5 MM

Capacitance µF	Box code	Max dimensions in mm B	H	L	Max dU/dt V/µs	Rthha °C/W 85 °C 0.2 m/s	Article code
0.56	R05	13.0	24.0	41.0	700	29	PHE450MR6560JR06L2
0.68	R05	13.0	24.0	41.0	700	28	PHE450MR6680JR06L2
0.82	R05	13.0	24.0	41.0	700	28	PHE450MR6820JR06L2
1.0	R04	15.0	26.0	41.0	700	27	PHE450MR7100JR06L2
1.2	R04	15.0	26.0	41.0	700	27	PHE450MR7120JR06L2
1.5	R02	16.5	32.0	41.0	700	24	PHE450MR7150JR06L2
1.8	R03	19.0	36.0	41.0	700	20	PHE450MR7180JR06L2
2.2	R03	19.0	36.0	41.0	700	20	PHE450MR7220JR06L2
2.7	R06	21.0	38.0	41.0	700	18	PHE450MR7270JR06L2
3.3	R08	28.0	43.0	41.0	700	18	PHE450MR7330JR06L2

1000 VDC / 375 VAC (1 SECTION)

LEAD SPACING 7.5 MM

Capacitance µF	Box code	Max dimensions in mm B	H	L	Max dU/dt V/µs	Rthha °C/W 85 °C 0.2 m/s	Article code
0.00033	K01	4.0	8.0	10.0	2000	160	PHE450PK3330JR05
0.00039	K01	4.0	8.0	10.0	2000	160	PHE450PK3390JR05
0.00047	K01	4.0	8.0	10.0	2000	160	PHE450PK3470JR05
0.00056	K01	4.0	8.0	10.0	2000	160	PHE450PK3560JR05
0.00068	K01	4.0	8.0	10.0	2000	160	PHE450PK3680JR05
0.00082	K01	4.0	8.0	10.0	2000	160	PHE450PK3820JR05
0.0010	K01	4.0	8.0	10.0	2000	160	PHE450PK4100JR05
0.0012	K01	4.0	8.0	10.0	2000	160	PHE450PK4120JR05
0.0015	K01	4.0	8.0	10.0	2000	160	PHE450PK4150JR05
0.0018	K01	4.0	8.0	10.0	2000	160	PHE450PK4180JR05
0.0022	K01	4.0	8.0	10.0	2000	160	PHE450PK4220JR05

Downloaded from Elcodis.com electronic components distributor

ARTICLE TABLE

1000 VDC / 375 VAC (1 SECTION)

LEAD SPACING 7.5 MM

Capacitance µF	Box code	Max dimensions in mm B	H	L	Max dU/dt V/µs	Rthha °C/W 85 °C 0.2 m/s	Article code
0.0027	K01	4.0	8.0	10.0	2000	160	PHE450PK4270JR05
0.0033	K01	4.0	8.0	10.0	2000	160	PHE450PK4330JR05
0.0039	K01	4.0	8.0	10.0	2000	160	PHE450PK4390JR05
0.0047	K03	5.0	11.0	10.0	2000	160	PHE450PK4470JR05
0.0056	K03	5.0	11.0	10.0	2000	160	PHE450PK4560JR05
0.0068	K03	5.0	11.0	10.0	2000	160	PHE450PK4680JR05
0.0082	K03	5.0	11.0	10.0	2000	160	PHE450PK4820JR05
0.010	K04	6.0	12.0	10.5	2000	160	PHE450PK5100JR05
0.012	K04	6.0	12.0	10.5	2000	160	PHE450PK5120JR05

LEAD SPACING 10 MM

Capacitance µF	Box code	Max dimensions in mm B	H	L	Max dU/dt V/µs	Rthha °C/W 85 °C 0.2 m/s	Article code
0.0010	A01	4.0	9.0	13.0	1400	142	PHE450PA4100JR05
0.0012	A01	4.0	9.0	13.0	1400	142	PHE450PA4120JR05
0.0015	A01	4.0	9.0	13.0	1400	142	PHE450PA4150JR05
0.0018	A01	4.0	9.0	13.0	1400	142	PHE450PA4180JR05
0.0022	A01	4.0	9.0	13.0	1400	142	PHE450PA4220JR05
0.0027	A01	4.0	9.0	13.0	1400	142	PHE450PA4270JR05
0.0033	A01	4.0	9.0	13.0	1400	142	PHE450PA4330JR05
0.0039	A01	4.0	9.0	13.0	1400	142	PHE450PA4390JR05
0.0047	A01	4.0	9.0	13.0	1400	142	PHE450PA4470JR05
0.0056	A01	4.0	9.0	13.0	1400	142	PHE450PA4560JR05
0.0068	A01	4.0	9.0	13.0	1400	142	PHE450PA4680JR05
0.0082	A02	4.5	10.5	13.0	1400	122	PHE450PA4820JR05
0.010	A02	4.5	10.5	13.0	1400	122	PHE450PA5100JR05
0.012	A03	5.0	11.0	13.0	1400	116	PHE450PA5120JR05
0.015	A04	6.0	12.0	13.0	1400	105	PHE450PA5150JR05
0.018	A04	6.0	12.0	13.0	1400	105	PHE450PA5180JR05

1000 VDC / 600 VAC (2 SECTION)

LEAD SPACING 15 MM

Capacitance µF	Box code	Max dimensions in mm B	H	L	Max dU/dt V/µs	Rthha °C/W 85 °C 0.2 m/s	Article code
0.0039	B04	5.5	10.5	18.0	2500	98	PHE450PB4390JR06
0.0047	B04	5.5	10.5	18.0	2500	98	PHE450PB4470JR06
0.0056	B04	5.5	10.5	18.0	2500	98	PHE450PB4560JR06
0.0068	B04	5.5	10.5	18.0	2500	99	PHE450PB4680JR06
0.0082	B04	5.5	10.5	18.0	2500	99	PHE450PB4820JR06
0.010	B04	5.5	10.5	18.0	2500	99	PHE450PB5100JR06
0.012	B04	5.5	10.5	18.0	2500	99	PHE450PB5120JR06
0.015	B04	5.5	10.5	18.0	2500	100	PHE450PB5150JR06
0.018	B05	5.5	12.5	18.0	2500	90	PHE450PB5180JR06
0.022	B05	5.5	12.5	18.0	2500	90	PHE450PB5220JR06
0.027	B10	6.5	12.5	18.0	2500	87	PHE450PB5270JR06
0.033	B06	7.5	14.5	18.0	2500	78	PHE450PB5330JR06
0.039	B06	7.5	14.5	18.0	2500	78	PHE450PB5390JR06
0.047	B12	8.0	15.0	18.0	2500	75	PHE450PB5470JR06
0.056	B11	8.5	16.0	18.0	2500	70	PHE450PB5560JR06
0.068	B14	9.5	17.5	18.0	2500	55	PHE450PB5680JR06

LEAD SPACING 22.5 MM

Capacitance µF	Box code	Max dimensions in mm B	H	L	Max dU/dt V/µs	Rthha °C/W 85 °C 0.2 m/s	Article code
0.022	D13	6.5	14.5	26.0	1800	58	PHE450PD5220JR06L2
0.027	D13	6.5	14.5	26.0	1800	58	PHE450PD5270JR06L2
0.033	D13	6.5	14.5	26.0	1800	58	PHE450PD5330JR06L2
0.039	D13	6.5	14.5	26.0	1800	58	PHE450PD5390JR06L2
0.047	D13	6.5	14.5	26.0	1800	58	PHE450PD5470JR06L2
0.056	D13	6.5	14.5	26.0	1800	58	PHE450PD5560JR06L2
0.068	D17	7.0	16.5	26.0	1800	55	PHE450PD5680JR06L2
0.082	D14	8.0	16.0	26.0	1800	54	PHE450PD5820JR06L2
0.10	D15	9.0	18.5	26.0	1800	50	PHE450PD6100JR06L2
0.12	D15	9.0	18.5	26.0	1800	50	PHE450PD6120JR06L2

1000 VDC / 600 VAC (2 SECTION)

LEAD SPACING 22.5 MM

Capacitance µF	Box code	Max dimensions in mm B	H	L	Max dU/dt V/µs	Rthha °C/W 85 °C 0.2 m/s	Article code
0.15	D18	10.5	19.0	26.0	1800	49	PHE450PD6150JR06L2
0.18	D16	11.0	21.5	26.0	1800	44	PHE450PD6180JR06L2
0.22	D20	13.5	23.0	26.0	1800	40	PHE450PD6220JR06L2
0.27	D19	15.5	24.5	26.0	1800	35	PHE450PD6270JR06L2

LEAD SPACING 27.5 MM

Capacitance µF	Box code	Max dimensions in mm B	H	L	Max dU/dt V/µs	Rthha °C/W 85 °C 0.2 m/s	Article code
0.15	F11	10.5	20.5	31.5	1300	38	PHE450PF6150JR06L2
0.18	F11	10.5	20.5	31.5	1300	38	PHE450PF6180JR06L2
0.22	F12	11.5	22.5	31.5	1300	36	PHE450PF6220JR06L2
0.22	F17	21.0	12.5	31.5	1300	36	PHE450PT6220JR06L2
0.27	F12	11.5	22.5	31.5	1300	36	PHE450PF6270JR06L2
0.33	F03	13.5	23.0	31.5	1300	35	PHE450PF6330JR06L2
0.39	F13	14.5	24.5	31.5	1300	34	PHE450PF6390JR06L2
0.47	F14	17.5	28.0	31.5	1300	30	PHE450PF6470JR06L2
0.47	F19	27.5	16.0	31.5	1300	30	PHE450PT6470JR06L2
0.56	F15	19.0	29.0	31.5	1300	28	PHE450PF6560JR06L2
0.68	F16	21.0	30.0	31.5	1300	25	PHE450PF6680JR06L2
0.68	F18	31.0	19.0	31.5	1300	25	PHE450PT6680JR06L2

LEAD SPACING 37.5 MM

Capacitance µF	Box code	Max dimensions in mm B	H	L	Max dU/dt V/µs	Rthha °C/W 85 °C 0.2 m/s	Article code
0.33	R05	13.0	24.0	41.0	800	28	PHE450PR6330JR06L2
0.39	R05	13.0	24.0	41.0	800	28	PHE450PR6390JR06L2
0.47	R05	13.0	24.0	41.0	800	28	PHE450PR6470JR06L2
0.56	R04	15.0	26.0	41.0	800	27	PHE450PR6560JR06L2
0.68	R02	16.5	32.0	41.0	800	25	PHE450PR6680JR06L2
0.82	R02	16.5	32.0	41.0	800	25	PHE450PR6820JR06L2
1.0	R03	19.0	36.0	41.0	800	20	PHE450PR7100JR06L2
1.2	R03	19.0	36.0	41.0	800	19	PHE450PR7120JR06L2
1.5	R08	28.0	43.0	41.0	800	19	PHE450PR7150JR06L2
1.8	R08	28.0	43.0	41.0	800	19	PHE450PR7180JR06L2

1600 VDC / 650 VAC (2 SECTION)

LEAD SPACING 15 MM

Capacitance µF	Box code	Max dimensions in mm B	H	L	Max dU/dt V/µs	Rthha °C/W 85 °C 0.2 m/s	Article code
0.0027	B04	5.5	10.5	18.0	2500	98	PHE450RB4270JR06
0.0033	B04	5.5	10.5	18.0	2500	98	PHE450RB4330JR06
0.0039	B04	5.5	10.5	18.0	2500	98	PHE450RB4390JR06
0.0047	B04	5.5	10.5	18.0	2500	98	PHE450RB4470JR06
0.0056	B04	5.5	10.5	18.0	2500	98	PHE450RB4560JR06
0.0068	B04	5.5	10.5	18.0	2500	99	PHE450RB4680JR06
0.0082	B04	5.5	10.5	18.0	2500	99	PHE450RB4820JR06
0.010	B04	5.5	10.5	18.0	2500	99	PHE450RB5100JR06
0.012	B04	5.5	10.5	18.0	2500	99	PHE450RB5120JR06
0.015	B05	5.5	12.5	18.0	2500	90	PHE450RB5150JR06
0.018	B10	6.5	12.5	18.0	2500	88	PHE450RB5180JR06
0.022	B10	6.5	12.5	18.0	2500	89	PHE450RB5220JR06
0.027	B06	7.5	14.5	18.0	2500	80	PHE450RB5270JR06
0.033	B12	8.0	15.0	18.0	2500	75	PHE450RB5330JR06
0.039	B11	8.5	16.0	18.0	2500	73	PHE450RB5390JR06
0.047	B14	9.5	17.5	18.0	2500	60	PHE450RB5470JR06
0.056	B14	9.5	17.5	18.0	2500	60	PHE450RB5560JR06

LEAD SPACING 22.5 MM

Capacitance µF	Box code	Max dimensions in mm B	H	L	Max dU/dt V/µs	Rthha °C/W 85 °C 0.2 m/s	Article code
0.010	D13	6.5	14.5	26.0	1800	60	PHE450RD5100JR06L2
0.012	D13	6.5	14.5	26.0	1800	60	PHE450RD5120JR06L2
0.015	D13	6.5	14.5	26.0	1800	60	PHE450RD5150JR06L2
0.018	D13	6.5	14.5	26.0	1800	58	PHE450RD5180JR06L2
0.022	D13	6.5	14.5	26.0	1800	58	PHE450RD5220JR06L2

Downloaded from Elcodis.com electronic components distributor

ARTICLE TABLE

1600 VDC / 650 VAC (2 SECTION)

LEAD SPACING 22.5 MM

Capacitance µF	Box code	Max dimensions in mm B	H	L	Max dU/dt V/µs	Rthha °C/W 85 °C 0.2 m/s	Article code
0.027	D13	6.5	14.5	26.0	1800	58	PHE450RD5270JR06L2
0.033	D13	6.5	14.5	26.0	1800	58	PHE450RD5330JR06L2
0.039	D13	6.5	14.5	26.0	1800	58	PHE450RD5390JR06L2
0.047	D17	7.0	16.5	26.0	1800	55	PHE450RD5470JR06L2
0.056	D17	7.0	16.5	26.0	1800	55	PHE450RD5560JR06L2
0.068	D15	9.0	18.5	26.0	1800	50	PHE450RD5680JR06L2
0.082	D15	9.0	18.5	26.0	1800	50	PHE450RD5820JR06L2
0.10	D18	10.5	19.0	26.0	1800	48	PHE450RD6100JR06L2
0.12	D16	11.0	21.5	26.0	1800	45	PHE450RD6120JR06L2
0.15	D20	13.5	23.0	26.0	1800	40	PHE450RD6150JR06L2
0.18	D20	13.5	23.0	26.0	1800	40	PHE450RD6180JR06L2
0.22	D19	15.5	24.5	26.0	1800	34	PHE450RD6220JR06L2

LEAD SPACING 27.5 MM

Capacitance µF	Box code	Max dimensions in mm B	H	L	Max dU/dt V/µs	Rthha °C/W 85 °C 0.2 m/s	Article code
0.082	F11	10.5	20.5	31.5	1300	37	PHE450RF5820JR06L2
0.10	F11	10.5	20.5	31.5	1300	37	PHE450RF6100JR06L2
0.10	F17	21.0	12.5	31.5	1300	37	PHE450RT6100JR06L2
0.12	F11	10.5	20.5	31.5	1300	37	PHE450RF6120JR06L2
0.15	F12	11.5	22.5	31.5	1300	36	PHE450RF6150JR06L2
0.18	F03	13.5	23.0	31.5	1300	35	PHE450RF6180JR06L2
0.22	F13	14.5	24.5	31.5	1300	35	PHE450RF6220JR06L2
0.22	F19	27.5	16.0	31.5	1300	35	PHE450RT6220JR06L2
0.27	F14	17.5	28.0	31.5	1300	32	PHE450RF6270JR06L2
0.33	F15	19.0	29.0	31.5	1300	28	PHE450RF6330JR06L2
0.33	F18	31.0	19.0	31.5	1300	28	PHE450RT6330JR06L2
0.39	F16	21.0	30.0	31.5	1300	25	PHE450RF6390JR06L2

LEAD SPACING 37.5 MM

Capacitance µF	Box code	Max dimensions in mm B	H	L	Max dU/dt V/µs	Rthha °C/W 85 °C 0.2 m/s	Article code
0.18	R05	13.0	24.0	41.0	800	27	PHE450RR6180JR06L2
0.22	R05	13.0	24.0	41.0	800	27	PHE450RR6220JR06L2
0.27	R05	13.0	24.0	41.0	800	27	PHE450RR6270JR06L2
0.33	R04	15.0	26.0	41.0	800	26	PHE450RR6330JR06L2
0.39	R02	16.5	32.0	41.0	800	24	PHE450RR6390JR06L2
0.47	R02	16.5	32.0	41.0	800	24	PHE450RR6470JR06L2
0.56	R03	19.0	36.0	41.0	800	20	PHE450RR6560JR06L2
0.68	R03	19.0	36.0	41.0	800	20	PHE450RR6680JR06L2
0.82	R06	21.0	38.0	41.0	800	18	PHE450RR6820JR06L2

2000 VDC / 700 VAC (2 SECTION)

LEAD SPACING 15 MM

Capacitance µF	Box code	Max dimensions in mm B	H	L	Max dU/dt V/µs	Rthha °C/W 85 °C 0.2 m/s	Article code
0.0010	B04	5.5	10.5	18.0	2500	98	PHE450SB4100JR06
0.0012	B04	5.5	10.5	18.0	2500	98	PHE450SB4120JR06
0.0015	B04	5.5	10.5	18.0	2500	98	PHE450SB4150JR06
0.0018	B04	5.5	10.5	18.0	2500	98	PHE450SB4180JR06
0.0022	B04	5.5	10.5	18.0	2500	98	PHE450SB4220JR06
0.0027	B04	5.5	10.5	18.0	2500	98	PHE450SB4270JR06
0.0033	B04	5.5	10.5	18.0	2500	98	PHE450SB4330JR06
0.0039	B04	5.5	10.5	18.0	2500	98	PHE450SB4390JR06
0.0047	B04	5.5	10.5	18.0	2500	98	PHE450SB4470JR06
0.0056	B04	5.5	10.5	18.0	2500	98	PHE450SB4560JR06
0.0068	B04	5.5	10.5	18.0	2500	98	PHE450SB4680JR06
0.0082	B05	5.5	12.5	18.0	2500	92	PHE450SB4820JR06
0.010	B10	6.5	12.5	18.0	2500	90	PHE450SB5100JR06
0.012	B06	7.5	14.5	18.0	2500	80	PHE450SB5120JR06
0.015	B06	7.5	14.5	18.0	2500	80	PHE450SB5150JR06
0.018	B12	8.0	15.0	18.0	2500	75	PHE450SB5180JR06
0.022	B11	8.5	16.0	18.0	2500	70	PHE450SB5220JR06
0.027	B14	9.5	17.5	18.0	2500	61	PHE450SB5270JR06

2000 VDC / 700 VAC (2 SECTION)

LEAD SPACING 22.5 MM

Capacitance µF	Box code	Max dimensions in mm B	H	L	Max dU/dt V/µs	Rthha °C/W 85 °C 0.2 m/s	Article code
0.0033	D13	6.5	14.5	26.0	1800	60	PHE450SD4330JR06L2
0.0039	D13	6.5	14.5	26.0	1800	60	PHE450SD4390JR06L2
0.0047	D13	6.5	14.5	26.0	1800	60	PHE450SD4470JR06L2
0.0056	D13	6.5	14.5	26.0	1800	60	PHE450SD4560JR06L2
0.0068	D13	6.5	14.5	26.0	1800	60	PHE450SD4680JR06L2
0.0082	D13	6.5	14.5	26.0	1800	60	PHE450SD4820JR06L2
0.010	D13	6.5	14.5	26.0	1800	60	PHE450SD5100JR06L2
0.012	D13	6.5	14.5	26.0	1800	60	PHE450SD5120JR06L2
0.015	D13	6.5	14.5	26.0	1800	60	PHE450SD5150JR06L2
0.018	D13	6.5	14.5	26.0	1800	58	PHE450SD5180JR06L2
0.022	D13	6.5	14.5	26.0	1800	58	PHE450SD5220JR06L2
0.027	D17	7.0	16.5	26.0	1800	55	PHE450SD5270JR06L2
0.033	D17	7.0	16.5	26.0	1800	55	PHE450SD5330JR06L2
0.039	D14	8.0	16.0	26.0	1800	53	PHE450SD5390JR06L2
0.047	D15	9.0	18.5	26.0	1800	52	PHE450SD5470JR06L2
0.056	D18	10.5	19.0	26.0	1800	50	PHE450SD5560JR06L2
0.068	D16	11.0	21.5	26.0	1800	45	PHE450SD5680JR06L2
0.082	D16	11.0	21.5	26.0	1800	45	PHE450SD5820JR06L2
0.10	D20	13.5	23.0	26.0	1800	40	PHE450SD6100JR06L2
0.12	D19	15.5	24.5	26.0	1800	35	PHE450SD6120JR06L2

LEAD SPACING 27.5 MM

Capacitance µF	Box code	Max dimensions in mm B	H	L	Max dU/dt V/µs	Rthha °C/W 85 °C 0.2 m/s	Article code
0.047	F11	10.5	20.5	31.5	1300	37	PHE450SF5470JR06L2
0.056	F11	10.5	20.5	31.5	1300	37	PHE450SF5560JR06L2
0.056	F17	21.0	12.5	31.5	1300	37	PHE450ST5560JR06L2
0.068	F12	11.5	22.5	31.5	1300	36	PHE450SF5680JR06L2
0.082	F12	11.5	22.5	31.5	1300	35	PHE450SF5820JR06L2
0.10	F03	13.5	23.0	31.5	1300	34	PHE450SF6100JR06L2
0.12	F14	17.5	28.0	31.5	1300	32	PHE450SF6120JR06L2
0.12	F19	27.5	16.0	31.5	1300	32	PHE450ST6120JR06L2
0.15	F14	17.5	28.0	31.5	1300	30	PHE450SF6150JR06L2
0.18	F15	19.0	29.0	31.5	1300	28	PHE450SF6180JR06L2
0.18	F18	31.0	19.0	31.5	1300	28	PHE450ST6180JR06L2

LEAD SPACING 37.5 MM

Capacitance µF	Box code	Max dimensions in mm B	H	L	Max dU/dt V/µs	Rthha °C/W 85 °C 0.2 m/s	Article code
0.10	R05	13.0	24.0	41.0	800	27	PHE450SR6100JR06L2
0.12	R05	13.0	24.0	41.0	800	27	PHE450SR6120JR06L2
0.15	R04	15.0	26.0	41.0	800	26	PHE450SR6150JR06L2
0.18	R04	15.0	26.0	41.0	800	26	PHE450SR6180JR06L2
0.22	R02	16.5	32.0	41.0	800	24	PHE450SR6220JR06L2
0.27	R03	19.0	36.0	41.0	800	20	PHE450SR6270JR06L2
0.33	R06	21.0	38.0	41.0	800	18	PHE450SR6330JR06L2
0.39	R06	21.0	38.0	41.0	800	18	PHE450SR6390JR06L2
0.47	R08	28.0	43.0	41.0	800	18	PHE450SR6470JR06L2
0.56	R08	28.0	43.0	41.0	800	18	PHE450SR6560JR06L2

2500 VDC / 900 VAC (3 SECTION)

LEAD SPACING 15 MM

Capacitance µF	Box code	Max dimensions in mm B	H	L	Max dU/dt V/µs	Rthha °C/W 85 °C 0.2 m/s	Article code
0.0010	B04	5.5	10.5	18.0	2500	98	PHE450TB4100JR06
0.0012	B04	5.5	10.5	18.0	2500	98	PHE450TB4120JR06
0.0015	B04	5.5	10.5	18.0	2500	98	PHE450TB4150JR06
0.0018	B04	5.5	10.5	18.0	2500	98	PHE450TB4180JR06
0.0022	B05	5.5	12.5	18.0	2500	92	PHE450TB4220JR06
0.0027	B10	6.5	12.5	18.0	2500	90	PHE450TB4270JR06
0.0033	B06	7.5	14.5	18.0	2500	80	PHE450TB4330JR06
0.0039	B06	7.5	14.5	18.0	2500	80	PHE450TB4390JR06
0.0047	B12	8.0	15.0	18.0	2500	75	PHE450TB4470JR06

Downloaded from Elcodis.com electronic components distributor

ARTICLE TABLE

Capacitance µF	Box code	Max dimensions in mm B	H	L	Max dU/dt V/µs	Rthha °C/W 85 °C 0.2 m/s	Article code
2500 VDC / 900 VAC (3 SECTION)							
LEAD SPACING 15 MM							
0.0056	B11	8.5	16.0	18.0	2500	70	PHE450TB4560JR06
0.0068	B11	8.5	16.0	18.0	2500	70	PHE450TB4680JR06
0.0082	B14	9.5	17.5	18.0	2500	60	PHE450TB4820JR06
LEAD SPACING 22.5 MM							
0.0047	D13	6.5	14.5	26.0	1800	60	PHE450TD4470JR06L2
0.0056	D13	6.5	14.5	26.0	1800	60	PHE450TD4560JR06L2
0.0068	D13	6.5	14.5	26.0	1800	60	PHE450TD4680JR06L2
0.0082	D17	7.0	16.5	26.0	1800	55	PHE450TD4820JR06L2
0.010	D14	8.0	16.0	26.0	1800	53	PHE450TD5100JR06L2
0.012	D15	9.0	18.5	26.0	1800	52	PHE450TD5120JR06L2
0.015	D15	9.0	18.5	26.0	1800	52	PHE450TD5150JR06L2
0.018	D18	10.5	19.0	26.0	1800	50	PHE450TD5180JR06L2
0.022	D16	11.0	21.5	26.0	1800	45	PHE450TD5220JR06L2
0.027	D20	13.5	23.0	26.0	1800	45	PHE450TD5270JR06L2
0.033	D19	15.5	24.5	26.0	1800	35	PHE450TD5330JR06L2
0.039	D19	15.5	24.5	26.0	1800	35	PHE450TD5390JR06L2
LEAD SPACING 37.5 MM							
0.22	R06	21.0	38.0	41.0	800	18	PHE450TR6220JR06L2

EVOX RIFA

Downloaded from Elcodis.com electronic components distributor