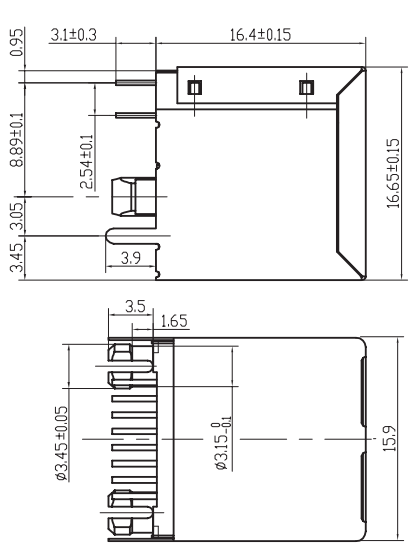

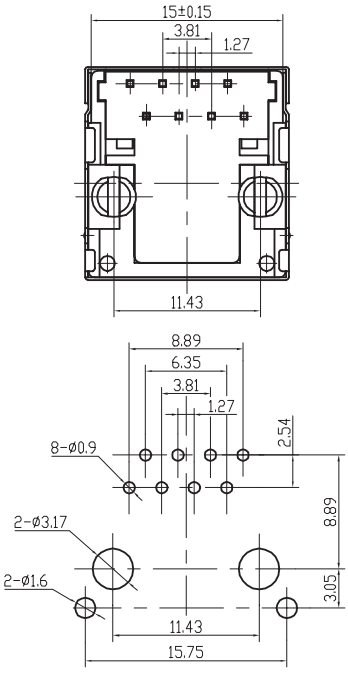

PCB LAYOUT - COMPONENT VIEW

TECHNICAL CHARACTERISTICS

MATERIAL
INSULATOR MATERIAL: GLASS FILED PBT
COLOUR: BLACK
CONTACT MATERIAL: COPPER ALLOY
CONTACT TYPE: STAMPED
CONTACT PLATING: SELECTIVE GOLD
SHIELDING: BRONZE NI PLATED
QUALITY CLASS: 500 MATING CYCLES

ENVIRONMENTAL
OPERATING TEMPERATURE: –25 °C UP TO 85 °C
FLAMMABILITY RATING UL94-V0
COMPLIANCE: LEAD FREE AND ROHS

ELECTRICAL
CURRENT RATING: 1.5 A
WORKING VOLTAGE: 120 VAC
INSULATION RESISTANCE: >500 MOHM
DIELECTRIC WITHSTANDING VOLTAGE: 1 000 VAC/MN
CONTACT RESISTANCE: 20 mOHM MAX

SOLDERING
WAVE PROCESS ONLY

PACKAGING
TRAY

RoHS Compliant

REV	DATE	FILE	BY
G			
F			
E			
D			
C			
B	05-DEC-07	MODIFICATIONS	EC
A	21-NOV-07	PDF	EC

PROJECTION:

GENERAL TOLERANCE
.X = +/- 0.2
.XX = +/- 0.15

APPROVAL: RJ

UNIT: MM
SCALE:
SHEET: 1/1
DRAW:

WÜRTH ELEKTRONIK

DESCRIPTION: RJ45 VERTICAL SHIELDED

WERI PART NO: 615008138221

SIZE A4

Downloaded from Elcodis.com electronic components distributor