REV.	BY	DATE	PART NO. SP30B
B		11-6 95	MECH & ELEC ANGLE REVISED

SPECIFICATIONS

ELECTRICAL

RESISTANCE VALUES	1K,2K,5K,10K,20K,50K,100K
RESISTANCE TOLERANCE	±10%
LINEARITY(INDEPENDENT)	±1%
ELECTRICAL ANGLE	320°±5°
END RESISTANCE	0.2% MAX.
RESOLUTION	ESSENTIALLY INFINITE
INSULATION RESISTANCE	1000MEGOHMS @1000 VDC
DIELECTRIC STRENGTH	1000 VAC
POWER RATING	1.5 WATT
CONTACT RESIS. VARIATION	BELOW 2% C.R.V.
OUTPUT SMOOTHNESS	LESS THAN 0.1%

MECHANICAL

NO OF TURNS	1
MECHANICAL ROTATION	320°+10°-0°
ROTATIONAL LIFE	20,000,000 TURNS
STOP STRENGTH	42 IN.OZ
TORQUE	.83 IN.OZ. MAX.
WEIGHT	1 OZ.

ENVIRONMENTAL

OPERATING TEMPERATURE	-55°C TO +125°C
TEMPERATURE COEFFICIENT	SEE CHART
VIBRATION	10HZ TO 2000HZ 15G
SHOCK	50G
MOISTURE RESISTANCE	40°C 95%RH 120 HOURS

MATERIALS

HOUSING	ANODIZED ALUMINUM
SHAFT	STAINLESS STEEL
TERMINALS	GOLD PLATED BRASS
RESISTANCE ELEMENT	CONDUCTIVE PLASTIC

OPTIONAL FEATURES

SHAFT MODIFICATIONS	O'RING SHAFT SEAL
REAR SHAFT	SERVO MOUNT
CENTER TAP	SPECIAL ANGLES

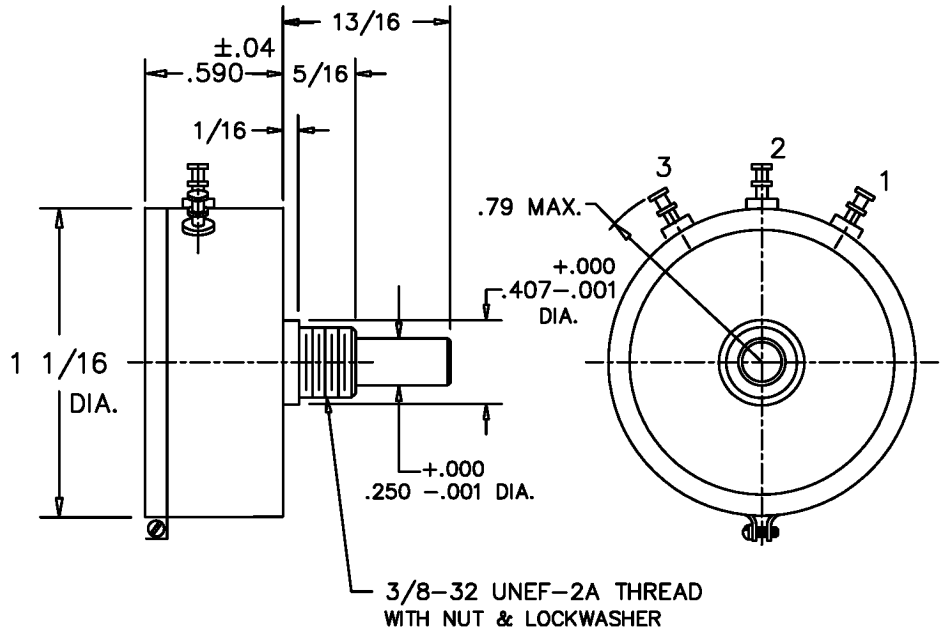

SCHEMATIC

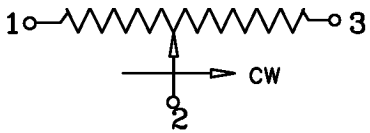

NOTES:

CONDUCTIVE PLASTIC
RESISTANCE ELEMENT

TOLERANCES

XX = .010 FRACTIONS = ?/64
XXX = ±.005 ANGLES = ±1/2°

ALL SPECIFICATIONS SUBJECT TO CHANGE WITHOUT NOTICE.

SCALE:	NONE
DATE:	6-1-88
BY:	
APRV'D	BT
CODE IDENT:	19477

THIS DOCUMENT CONTAINS PROPRIETARY DATA OF POLARIS INDUSTRIAL ENTERPRISES,INC. NO DISCLOSURE, REPRODUCTION, OR USE OF ANY PART THERE OF MAY BE MADE EXCEPT BY WRITTEN PERMISSION.

TITLE

SINGLE TURN POTENTIOMETER

ETI SYSTEMS CARLSBAD CALIFORNIA

PART NO. SP30B

Downloaded from Elcodis.com electronic components distributor