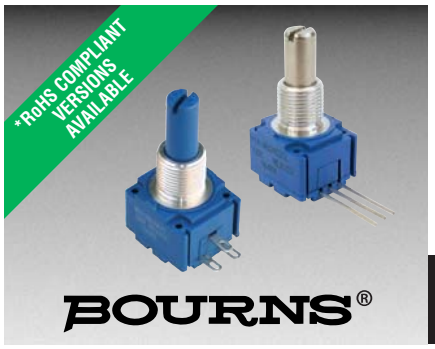

Features

- Available in a variety of pin-out configurations
- Virtually infinite electrical circuit isolation
- Model 96 sealed for board wash
- Metal or plastic shaft options
- DPST and DPDT switch options
- RoHS compliant versions available*

91, 92, 93, 94, 95, 96 - 5/8 " Square Single-Turn Panel Control
97, 99 - 5/8 " Square Single-Turn Panel Control with Rotary Switch

Potentiometer Specifications

Initial Electrical Characteristics[1]	Conductive Plastic Element	Cermet Element
Standard Resistance Range		
Linear Tapers (A, B, E, & H)	(B & E) 1 K ohms to 1 megohm	(A & H) 100 ohms to 1 megohm
Audio Tapers (C, D, F, G, S, & T)	(D,G,S, & T) 1 K ohms to 1 megohm	(C & F) 1 K ohms to 1 megohm
Total Resistance Tolerance	10 % or 20 %	5% or 10%
Independent Linearity	±5 %	±5 %
Absolute Minimum Resistance	2 ohms maximum	2 ohms maximum
Effective Electrical Angle	(Linear tapers) 240 ° ± 5 ° (Audio tapers) 225 ° ± 5 °	(Linear tapers) 240 ° ± 6 ° (Audio tapers) 225 ° ± 6 °
Contact Resistance Variation	±1 %	±1 % or 3 ohms (whichever is greater)
Dielectric Withstanding Voltage (MIL-STD-202, Method 301)		
Sea Level	1,500 VAC minimum	1,500 VAC minimum
70,000 Feet	500 VAC minimum	500 VAC minimum
Insulation Resistance (500 VDC)	1,000 megohms minimum	1,000 megohms minimum
Power Rating (Voltage Limited By Power Dissipation or 350 VAC, Whichever Is Less)		
+70 °C Single Section Assembly	(Linear tapers) 0.5 watt (Audio tapers) 0.25 watt	(Linear tapers) 2 watts (Audio tapers) 1 watt
+70 °C Multiple Section Assembly	(Linear tapers) 0.5 watt/section (Audio tapers) 0.25 watt/section	(Linear tapers) 1 watt/section (Audio tapers) 0.5 watt/section
+125 °C	0 watt	0 watt
Theoretical Resolution	Essentially infinite	Essentially infinite

Environmental Characteristics[1]		
Operating Temperature Range	-40 °C to +125 °C	-40 °C to +125 °C
Storage Temperature Range	-55 °C to +125 °C	-55 °C to +125 °C
Temperature Coefficient Over Storage Temperature Range	±1,000 ppm/°C	±150 ppm/°C
Vibration (Single Section)	15 G	15 G
Total Resistance Shift	±2 % maximum	±2 % maximum
Voltage Ratio Shift	±5 % maximum	±5 % maximum
Shock (Single Section)	30 G	30 G
Total Resistance Shift	±2 % maximum	±2 % maximum
Voltage Ratio Shift	±5 % maximum	±5 % maximum
Load Life	1,000 hours	1,000 hours
Total Resistance Shift	±10 % maximum	±5 % maximum
Rotational Life (No Load)	100,000 cycles	100,000 cycles
Total Resistance Shift	(Linear tapers) 10 ohms or ±15 % TRS max. (whichever is greater) (Audio tapers) ±20 % maximum	(All tapers) ±5 % TRS max.
Contact Resistance Variation @ 50,000 cycles	(Linear tapers) ±2 % (Audio tapers) ±3 %	±2 % ±3 %
Moisture Resistance (MIL-STD-202, Method 103, Condition B)		
Total Resistance Shift	(Linear tapers) ±10 % TRS maximum (Audio tapers) ±20 % TRS maximum	(All tapers) ±5 % TRS maximum
Insulation Resistance (500 VDC)	100 megohms minimum	100 megohms minimum
IP Rating (Model 96)	IP 65	IP 65
(All Others)	IP 40	IP 40

*RoHS Directive 2002/95/EC Jan 27 2003 including Annex
Specifications are subject to change without notice.
Customers should verify actual device performance in their specific applications.

Downloaded from Elcodis.com electronic components distributor

Potentiometer Specifications

Mechanical Characteristics[1]

Stop Strength (1/4 ” D shaft).....45.19 N-cm (4 lb.-in.)
(1/8 ” D shaft) .....33.89 N-cm (3 lb.-in.)
Mechanical Angle .....300 ° ±5 °
Torque
Starting .....0.3 max. above average running torque
Running Torque
Single or Dual Section (A ,D & R Bushings) .....0.21 to 1.06 N-cm (0.3 to 1.5 oz.-in.)
Single or Dual Section (C & U Bushings) .....0.14 to 1.06 N-cm (0.2 to 1.5 oz.-in.)
Mounting .....(Metal Bushing) 1.7-2.0 N-m (15-18 lb.-in.) maximum
Plastic Bushing) 56-79 N-cm (5-7 lb.-in.) maximum
Variation .....0.35 N-cm (0.5 oz.-in.) maximum in 45 ° shaft travel
Weight (Single Section, Plastic Bushing) .....7.3 grams nominal
Weight (Single Section, Metal Bushing) .....12.7 grams nominal
(Each Additional Section).....4 grams nominal
Terminals .....Printed circuit terminals, J-Hooks or solder lugs
Soldering Condition .....Recommended hand soldering using Sn95/Ag5 no clean solder, 0.025 ” wire diameter.
Maximum temperature 399 °C (750 °F) for 3 seconds. No wash process to be used with no clean flux.
Marking.....Manufacturer’s trademark, date code, resistance, manufacturer’s part number
Ganging (Multiple Section Potentiometers) .....2 cups maximum
Hardware .....One lockwasher and one mounting nut is shipped with each potentiometer, except where noted in the part number.

NOTE: ALL MODEL 90 PERFORMANCE SPECIFICATIONS DO NOT APPLY TO UNITS SUBJECTED TO PRINTED CIRCUIT BOARD CLEANING PROCEDURES, EXCEPT FOR THE SEALED VERSION (MODEL 96).

[1]AT ROOM AMBIENT: +25 °C NOMINAL AND 50 % RELATIVE HUMIDITY NOMINAL, EXCEPT AS NOTED.

Specifications are subject to change without notice.
Customers should verify actual device performance in their specific applications.

Downloaded from Elcodis.com electronic components distributor

Rotary Switch Specifications

Initial Electrical Characteristics[1]

Contacts:
- DPST ..... N.O/N.O., N.C./N.C. or N.O./N.C.
- DPDT ..... 2 N.O./N.C. (break before make)

Power Rating (Resistive Load):
- DPST ..... 2 A @ 125 volts RMS-60 Hz or 2 A @ 28 VDC, 1 A @ 250 volts RMS-60 Hz
- DPDT ..... 1 A @ 125 volts RMS-60 Hz or 1 A @ 28 VDC

Contact Resistance (0.1 VDC-10 mA) ..... 10 milliohms nominal
Contact Bounce ..... 5 milliseconds maximum
Dielectric Withstanding Voltage (MIL-STD-202, Method 301)
- Sea Level ..... 1500 VAC minimum

Insulation Resistance ..... 1000 megohms minimum

Environmental Characteristics[1]

Operating Temperature Range ..... 0 °C to +70 °C
Exposure Temperature Range ..... -65 °C to +125 °C
Vibration (Dual Section) ..... 8 G
- Contact Resistance ..... 10 milliohms maximum
- Contact Bounce ..... 0.1 millisecond maximum

Shock (Dual Section) ..... 20 G
- Contact Resistance ..... 10 milliohms maximum
- Contact Bounce ..... 0.1 millisecond maximum

Rotational Life ..... 25,000 cycles
- Switch Actuating Torque (50% Duty cycle @ Rated Power Load) ..... 1.41 to 4.94 N-cm (2 to 7 oz.-in.)
- Contact Resistance ..... 100 milliohms maximum

Moisture Resistance (MIL-STD-202, Method 106, Condition B)
- Contact Resistance (0.1 VDC-10 mA) ..... 10 milliohms maximum
- Insulation Resistance (After 24 Hours @ Room Temperature) (500 VDC) ..... 100 megohms minimum

Housing Material ..... High temperature, flame retardant, thermosetting plastic

Mechanical Characteristics[1]

Actuating Torque (Each Section, Switch Module Only) ..... 3.53 to 10.59 N-cm (5 to 15 oz.-in.)
Running Torque (Out of Detent, 2-4 Module Assembly) ..... 0.21 to 1.41 N-cm (0.3 to 2 oz.-in.)
Detent ..... CW or CCW standard
Actuation Angle ..... 20 ° ±5 °
Contact Materials ..... Fine silver with gold overlay
Terminal Styles ..... Solder lug only
- Standard Orientation ..... In-line with control terminals
- Optional ..... Rotated 90 ° CCW from standard

Terminal Strength (Before and After Soldering Heat Exposure) ..... 0.9 kg (2 lbs.) minimum

NOTE: Model 99 performance specifications do not apply to units subjected to printed circuit board cleaning procedures.

[1]At room ambient: +25 °C nominal and 50 % relative humidity nominal, except as noted.

Specifications are subject to change without notice.
Customers should verify actual device performance in their specific applications.

Downloaded from Elcodis.com electronic components distributor

Product Dimensions

Model 91 & 96 PC Pin Terminals, In-Line

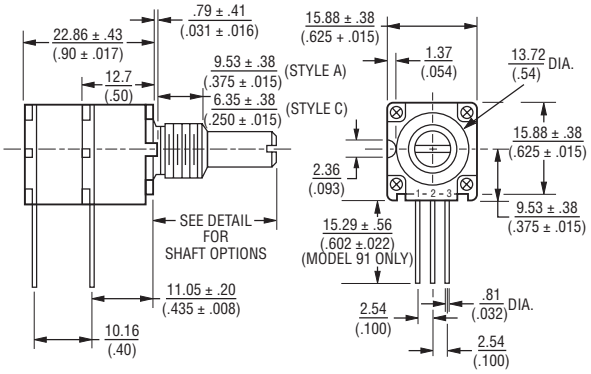

Model 93 PC Pin Terminals, "L" Pattern

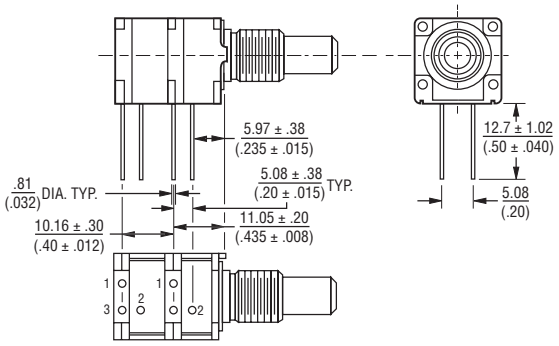

Model 92 J-Hooked Terminals, In-Line

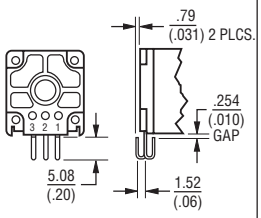

Model 94 J-Hooked Terminals, "L" Pattern

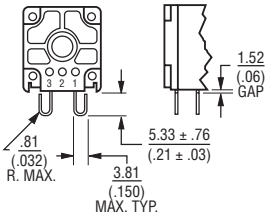

Bushing Styles

3/8 THREADLESS (9.53 mm) (STYLE "D")
3/8-32 UNEF (9.53 mm) (STYLE "A")
1/4-32 UNEF (6.35 mm) (STYLE "C")
M10 X 0.75-6g (STYLE "R")
M7 X 0.75-6g (STYLE "U")

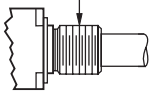

Model 97 1st Cup Same As Model 93 (2nd Cup - Switch)

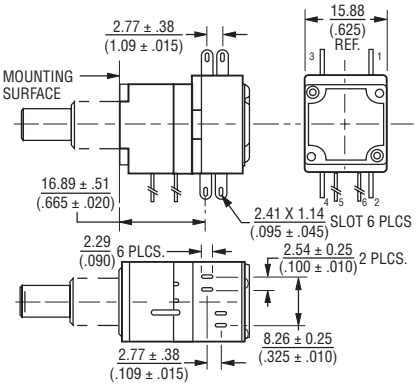

Model 99 1st Cup Same As Model 95 (2nd Cup - Switch)

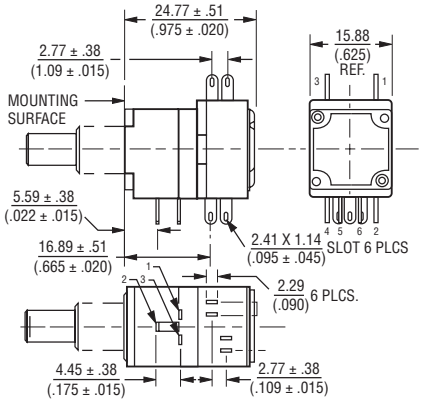

Model 95 Solder Lug Terminals, "Triangular" Pattern

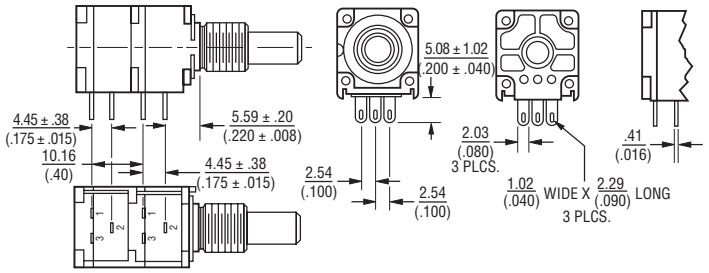

TOLERANCES EXCEPT AS SHOWN: DECIMAL .XXX ± .128 (.015) FRACTION ± 1/64
.XX ± .005 (.38) ANGLE ±5 °

DIMENSIONS ARE: MM / (INCHES)

Switch Module Variations Shaft Flat Orientation

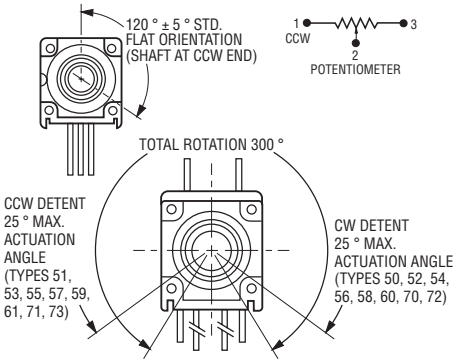

NOTE: Switch terminals shown in vertical position.

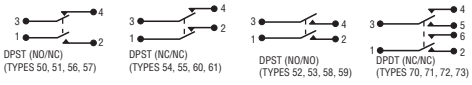

Switch contacts shown in detent position.

Specifications are subject to change without notice.
Customers should verify actual device performance in their specific applications.

Downloaded from Elcodis.com electronic components distributor

91, 92, 93, 94, 95, 96, 97, 99 - 5/8 ” Square Single-Turn BOURNS®

Product Dimensions

Plastic Shaft Styles

SHAFT TYPE "B" (USES BUSHING A OR D)

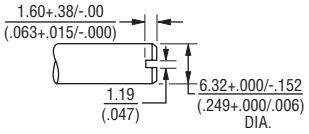

STD. LENGTHS:

12.70 (.500)	15.88 (.625)	19.05 (.750)	22.23 (.875)

SHAFT TYPE "D" (USES BUSHING C)

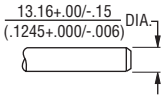

STD. LENGTHS:

12.70 (.500)	15.88 (.625)	19.05 (.750)

SHAFT TYPE "T" (USES BUSHING U)

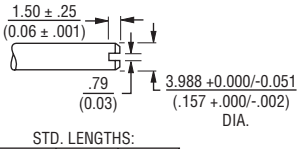

STD. LENGTHS:

12.00 (.472)	16.00 (.630)	22.00 (.866)

SHAFT TYPE "C" (USES BUSHING A OR D)

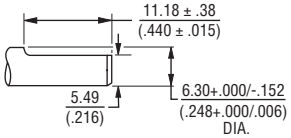

STD. LENGTHS:

22.23 (.875)

SHAFT TYPE "R" (USES BUSHING R)

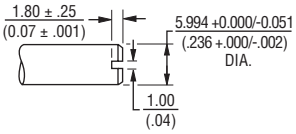

STD. LENGTHS:

16.0 (.630)	19.0 (.748)	22.0 (.866)

SHAFT TYPE "W" (USES BUSHING A OR D)

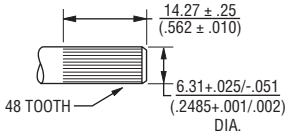

STD. LENGTHS:

25.40 (1.00)

Metal Shaft Styles

SHAFT TYPE "A" (USES BUSHING A)

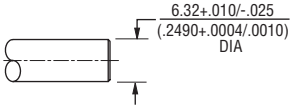

STD. LENGTHS:

12.70 (.500)	15.88 (.625)	19.05 (.750)	22.23 (.875)	25.4 (1.000)

SHAFT TYPE "H" (USES BUSHING A)

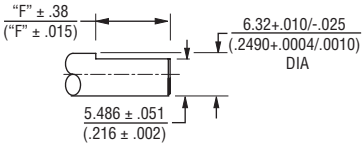

STD. LENGTHS:

12.70 (.500)	15.88 (.625)	19.05 (.750)	22.23 (.875)	25.4 (1.000)

FLAT LENGTH “F”:

1.60 (.063)	4.78 (.188)	7.95 (.313)	11.13 (.438)	14.30 (.563)

SHAFT TYPE "V" (USES BUSHING U)

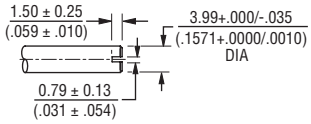

STD. LENGTHS:

12.0 (.472)	16.0 (.630)	19.0 (.748)	22.0 (.866)

SHAFT TYPE "G" (USES BUSHING A)

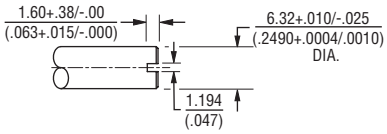

STD. LENGTHS:

12.70 (.500)	15.88 (.625)	19.05 (.750)	22.23 (.875)	25.4 (1.000)

SHAFT TYPE "J" (USES BUSHING R)

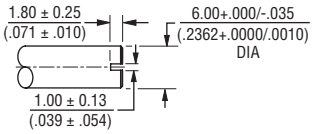

STD. LENGTHS:

12.0 (.472)	16.0 (.630)	19.0 (.748)	22.0 (.866)

SHAFT TYPE "Y" (USES BUSHING A)

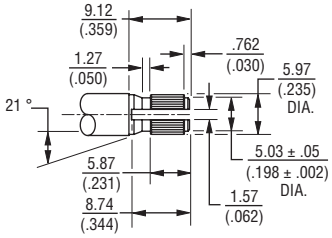

STD. LENGTHS:

19.05 (.750)

DIMENSIONS ARE: MM (INCHES)

TOLERANCES EXCEPT AS SHOWN: .XX = ± .02 (.050)
.XXX = ± .005 (.127)
.XXXX = ± .0005 (.0127)

Specifications are subject to change without notice.
Customers should verify actual device performance in their specific applications.

Downloaded from Elcodis.com electronic components distributor

How to Order 90 Series Panel Controls

BOURNS®

91	A	2	A	-	A	28	-	A	15	/	A15	L
99	A	2	A	-	B	28	-	A	15	/	R51	L

Models 91 - 96: Part number for multiple section potentiometers must have a taper and resistance value for each section.

Models 97 & 99: Part number must contain a switch type.

RoHS IDENTIFIER	
L	Compliant
Blank	Non-Compliant

ANTI-ROTATION LUG	
A	**Single .305 " (7.8 mm) R, 90 °CW**
C	Single .305 " (7.8 mm) R, 270 °CW
D	**No Lug**

# SECTIONS		APPLICABLE MODELS
1	**Single**	**Models 91 Thru 96 Only**
2	Dual	All Models, 2nd Section is a Switch in Model 99

SWITCH TYPE (MODELS 97 & 99 ONLY)	
(R50)	DPST N.O./N.C. CW Detent In-Line Term
(R51)	**DPST N.O./N.C. CCW Detent In-Line Term**
(R52)	DPST N.O./N.O. CW Detent In-Line Term
(R53)	DPST N.O./N.O. CCW Detent In-Line Term
(R54)	DPST N.C./N.C. CW Detent In-Line Term
(R55)	DPST N.C./N.C. CCW Detent In-Line Term
(R56)	DPST N.O./N.C. CW Detent Horz Term
(R57)	DPST N.O./N.C. CCW Detent Horz Term
(R58)	DPST N.O./N.O. CW Detent Horz Term
(R59)	DPST N.O./N.O. CCW Detent Horz Term
(R60)	DPST N.C./N.C. CW Detent Horz Term
(R61)	DPST N.C./N.C. CCW Detent Horz Term
(R70)	DPDT CW Detent In-Line Term
(R71)	DPDT CCW Detent In-Line Term
(R72)	DPDT CW Detent Horz Term
(R73)	DPDT CCW Detent Horz Term

BUSHING	
A	**Metal Plain 3/8 " (9.53 mm) D x 3/8 " (9.53 mm) L**
C	**Metal Plain 1/4 " (6.35 mm) D x 1/4 " (6.35 mm) L**
D	Plastic Unthreaded 3/8 " (9.53 mm) D x 3/8 " (9.53 mm) L
R	**Metal Plain 10 mm D x 9 mm L**
U	**Metal Plain 7 mm D x 9 mm L**

SHAFT LENGTH (FMS)		AVAILABLE ONLY IN BUSHING
Code	**Description**	**Code**
16	1/2 "L	A, C, D
20	5/8 "L	A, C, D
24	**3/4 "L**	A, C, D
28	**7/8 "L**	**A, D**
32	1 "L	A, D
METRIC		
12	12 mmL	U
16	16 mmL	R, U
19	19 mmL	R
22	**22 mmL**	R, U

ELEMENT TYPE TAPER/TOLERANCE		RESISTANCE CODE VALUE IN OHMS	
(A) (H)	**Linear Cermet ±10 %** Linear Cermet ±5 %	(05) - 100 (28) -150 (06) - 200 (07) - 250 (08) - 500 (09) - 750 **(10) - 1 K** (29) - 1.5 K (11) - 2 K (12) - 2.5 K **(13) - 5 K** (14) - 7.5 K **(15) - 10 K**	(30) - 15 K (16) - 20 K (17) - 25 K **(18) - 50 K** (19) - 75 K **(20) - 100 K** (31) - 150 K (21) - 200 K (22) - 250 K (23) - 500 K (24) - 750 K (25) - 1 M
(B) (E)	**Linear C-P ±20 %** Linear C-P ±10 %	**(10) - 1 K** (12) - 2.5 K **(13) - 5 K** **(15) - 10 K** (16) - 20 K (17) - 25 K	**(18) - 50 K** **(20) - 100 K** (22) - 250 K (23) - 500 K (25) - 1 M
(C) (D) (F) (G) (S) (T)	CW Audio Cermet ±10 % CW Audio C-P ±20 % CCW Audio Cermet ±10 % CCW Audio C-P ±20 % CW Audio C-P ±10 % CCW Audio C-P ±10 %	(10) - 1 K (12) - 2.5 K (13) - 5 K (15) - 10 K (17) - 25 K	(18) - 50 K (20) - 100 K (22) - 250 K (23) - 500 K (25) - 1 M

MODEL	
91	**Single-Turn, In-Line PC Pins**
92	Single-Turn, In-Line J-Hooks
93	Single-Turn, L-Pattern PC Pins
94	Single-Turn, L-Pattern J-Hooks
95	Single-Turn, Triangle-Pattern Solder Lugs
96	Single-Turn, In-Line PC Pins, Sealed*
97	Single-Turn, L-Pattern PC Pins w/Switch
99	**Single-Turn, Triangle-Pattern Solder Lugs w/Switch**

*Model 96 is not available in multi-gang versions.

SHAFT TYPE		AVAILABLE ONLY IN LENGTHS (CODE)	BUSHINGS (CODE)
B	**Plastic Single Slotted 1/4 " (6.35 mm) D**	16,20,24,28	**A,D**
C	**Plastic Single Flatted 1/4" (6.35 mm) D**	24,28	**A,D**
D	Plastic Single Plain 1/8" (3.18 mm) D	16,20,24	C
R	**Plastic Single Slotted 6 mm D**	Metric 16,19,22	R
T	**Plastic Single Slotted 4 mm D**	Metric 16,19,22	U
W	Plastic Single Knurled 1/4" (6.35 mm) D	32	**A,D**
A	**Metal Single Plain 1/4" (6.35 mm) D**	16,20,24,28,32	**A**
G	**Metal Single Slotted 1/4" (6.35 mm) D**	16,20,24,28,32	**A**
H	**Metal Single Flatted 1/4" (6.35 mm) D**	16,20,24,28,32	**A**
J	**Metal Single Slotted 6 mm D**	Metric 12,16,19,22	R
V	**Metal Single Slotted 4 mm D**	Metric 12,16,19,22	U
Y	**Metal Single Knurled 1/4" (6.35 mm) D**	24	**A**

Boldface features are Bourns standard options.
All others are available with higher minimum order quantities.

REV. 08/09

Specifications are subject to change without notice.
Customers should verify actual device performance in their specific applications.

Downloaded from Elcodis.com electronic components distributor