BILL OF MATERIALS				
DET.	QTY.	DESCRIPTION	MATERIAL	PLATING
1	1	CAP	BRASS	NICKEL
2	1	B.P. WASHER	BRASS	NICKEL
3	1	LOCKWASHER	STEEL	ZINC
4	1	SCREW 8–32 THD	BRASS	NICKEL

REVISIONS				
SYM	DESCRIPTION	REVISED BY	DATE	APPR

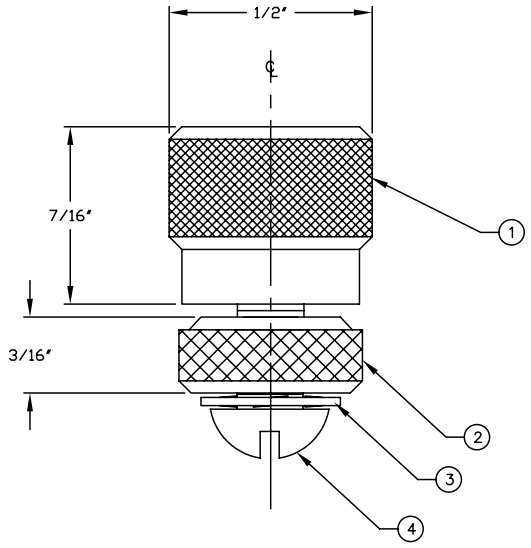

*NOTE: PART SOLD UNASSEMBLED

MATERIAL "SEE TABLE"	FINISH "SEE TABLE"		
DIMENSIONAL TOLERANCES UNLESS OTHERWISE SPECIFIED	TITLE 110 ALL METAL BINDING POST ASSEMBLY		
.XX / .XXX / .XXXX			
– – – / – – – / – – –			
FRACTIONS / ANGLES / SCALE			
– – – / – – – / 4:1	DRAWN: J. TEASDALE DATE 11/29/93	SIZE	DRAWING NUMBER / ISSUE
HEAT TREAT – – –	CHECKED: DATE	B	SD–110 / C
PLOT SCALE: 1:1	APPROVED: DATE		

ABBATRON
Electronic Connectors and Hardware
632 Arch Street, Meadville, Pa. 16335

Downloaded from Elcodis.com electronic components distributor