MATERIAL NUMBER	ENGINEERING NUMBER	AS-17143-	STUD SIZE	A MAX	C ±.010(0.25)	F DIA	G DIA ±.005(±0.13)	H MIN	J MIN	W ±.005(0.13)	WIRE SIZE	INSULATION SLEEVE COLOR
190950022	AA-880-1	1	8	1.359(34.52)	.310(7.87)	.052/.070(1.32/1.78)	.173(4.39)	.621(15.77)	.120(3.04)	.390(9.91)	22-18 AWG .25-2.5 MM²	RED
190950024	AA-881-1	4	6	1.109(28.17)	.227(5.77)	.052/.070(1.32/1.78)	.146(3.71)	.465(11.81)	.120(3.04)	.302(7.67)		
190950026	AA-882-1	7	8	1.109(28.17)	.227(5.77)	.052/.070(1.32/1.78)	.173(4.39)	.465(11.81)	.120(3.04)	.302(7.67)		
190950028	AA-883-1	10	5	.859(21.82)	.143(3.63)	.052/.070(1.32/1.78)	.133±.004(3.38)±0.10	.277(7.04)	.120(3.04)	.277(7.04)		
190950030	AA-884-1	13	6	1.015(25.78)	.195(4.95)	.052/.070(1.32/1.78)	.146(3.71)	.404(10.26)	.120(3.04)	.237(6.02)		
190950032	AA-885-1	16	4	1.015(25.78)	.195(4.95)	.052/.070(1.32/1.78)	.119±.004(3.02)±0.10	.404(10.26)	.120(3.04)	.237(6.02)		
190950034	AA-886-1	19	4	.796(20.22)	.143(3.63)	.052/.070(1.32/1.78)	.119±.004(3.02)±0.10	.237(6.02)	.120(3.04)	.237(6.02)		
190950133	BB-880-2	2	8	1.359(34.52)	.227(5.77)	.081/.090(2.06/2.29)	.173(4.39)	.621(15.77)	.153(3.89)	.390(9.91)	16-14 AWG 1.0-2.5 MM²	BLUE
190950134	BB-881-2	5	6	1.109(28.17)	.227(5.77)	.081/.090(2.06/2.29)	.146(3.71)	.465(11.81)	.153(3.89)	.302(7.67)		
190950074	BB-882-2	8	8	1.109(28.17)	.227(5.77)	.081/.090(2.06/2.29)	.173(4.39)	.465(11.81)	.153(3.89)	.302(7.67)		
190950076	BB-883-2	11	5	.859(21.82)	.143(3.63)	.081/.090(2.06/2.29)	.133±.004(3.38)±0.10	.277(7.04)	.153(3.89)	.277(7.04)		
190950136	BB-884-2	14	6	1.015(25.78)	.195(4.95)	.081/.090(2.06/2.29)	.146(3.71)	.404(10.26)	.153(3.89)	.237(6.02)		
190950137	BB-885-2	17	4	1.015(25.78)	.195(4.95)	.081/.090(2.06/2.29)	.119±.004(3.02)±0.10	.404(10.26)	.153(3.89)	.237(6.02)		
190950139	BB-886-2	20	4	.796(20.22)	.143(3.63)	.081/.090(2.06/2.29)	.119±.004(3.02)±0.10	.237(6.02)	.153(3.89)	.237(6.02)		

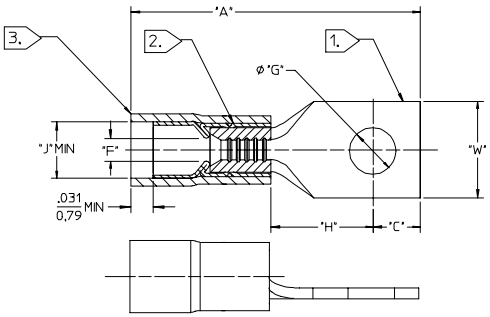

SALES DRAWING

NOTES:

1. TERMINAL MATERIAL: COPPER, PLATING TIN.
2. FERRULE: TIN-PLATED BRASS.
3. INSULATION: NYLON, COLOR SEE CHART.
4. ALL TERMINALS MUST MEET MS/AS17143 TYPE 2 REQUIREMENTS.

REV	DESCRIPTION
A	NEW RELEASE EC NO: ETC2005-0077 2004/12/21 DRWN:BENDERLE 2004/12/21 CHKD:R DEROSS 2004/12/21 APPR: JPAWLICK 2004/12/22

QUALITY SYMBOLS: ▼=0 ⊽=0

GENERAL TOLERANCES (UNLESS SPECIFIED)

	mm	INCH
4 PLACES	± ---	± ---
3 PLACES	± ---	± .005
2 PLACES	± 0.13	± .01
1 PLACE	± 0.25	± ---
ANGULAR ±1/2°		

DRAFT WHERE APPLICABLE MUST REMAIN WITHIN DIMENSIONS

DIMENSION STYLE: IN/MM
SCALE: 1:1
DESIGN UNITS: INCH
THIRD ANGLE PROJECTION

DRAWN BY: BENDERLE	DATE: 2004/11/29	TITLE: TERMINAL LUGS MS17143-XX AS17143-XX
CHECKED BY: R DEROSS	DATE: 2004/11/29	
APPROVED BY: R DEROSS	DATE: 2004/11/29	molex MOLEX INCORPORATED
MATERIAL NO.: SEE CHART		DOCUMENT NO.: SD-19095-006
SIZE: C		SHEET NO.: 1 OF 1

THIS DRAWING CONTAINS INFORMATION THAT IS PROPRIETARY TO MOLEX INCORPORATED AND SHOULD NOT BE USED WITHOUT WRITTEN PERMISSION

tb_frame_C_P_AM_T
Rev. D 2004/06/28

Downloaded from Elcodis.com electronic components distributor