REVISIONS		
ISS	ZONE	DESCRIPTION\PER REQUEST\DATE

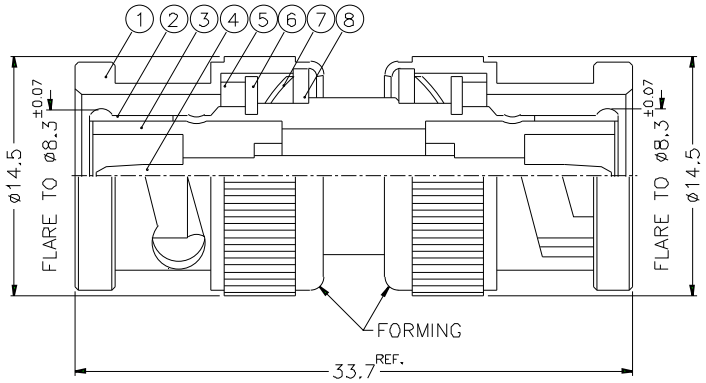

NOTES: FINISH (PLATING THICKNESS IN MICRO-INCHES)
1. BRASS PER QQ-B-626
2. BRASS PER QQ-B-613
3. NICKEL PL. 100 MIN. THICK OVER COPPER STRIKE
4. NICKEL PL. 200 MIN. THICK OVER COPPER STRIKE
5. GOLD PL. 3 MIN. THICK OVER NICKEL PL. 100 MIN. THICK OVER COPPER STRIKE

NO.	DESCRIPTION	MATERIAL	FINISH	Q'TY	DRAWING NO.
8	WASHER	NOTE 2	NOTE 3	2	WS-128/9X08
7	SPRING	SK5	NOTE 4	2	B50000-6
6	RETAINER RING	NOTE 1	NOTE 3	2	B50000-5
5	GASKET	RUBBER	RED	2	GS-115/8X15
4	CONTACT PIN	NOTE 1	NOTE 5	1	B5900-5
3	INSULATOR	DELRIN	NATURAL	2	B50002-3-50
2	BODY	NOTE 1	NOTE 3	1	B5900-2
1	SHELL	NOTE 1	NOTE 3	2	B50000-1-B

DIMENSIONS ARE IN MILLIMETERS

UNLESS OTHERWISE SPECIFIED TOLERANCES
0.5-6 = ±0.2
6-30 = ±0.4
30-120 = ±0.6
120-315 = ±1
315-1000 = ±1.6
1000-2000 = ±2.4

SCALE 3/1 ISSUE A

PART NO. B2071A2-ND3G-50

APPROVED DATE 10-11-01'

CHECKED DATE 10-11-01'

DRAWN DATE 10-11-01'

FILE NO.

Amphenol

TITLE
BNC MALE TO BNC MALE ADAPTOR

DRAWING NO.
KJ-B2071A2-ND3G-50

ITEM NO.

Downloaded from Elcodis.com electronic components distributor