REVISIONS		
ISS	ZONE	DESCRIPTION\PER REQUEST\DATE

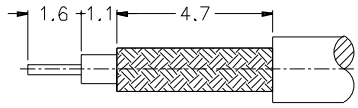

RECOMMENDED
CABLE STRIPPING DIM'S

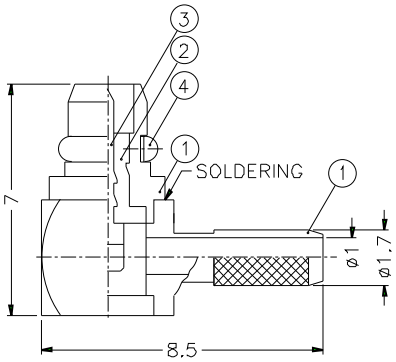

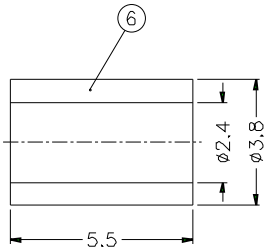

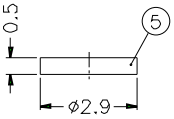

NOTES: FINISH (PLATING THICKNESS IN MICRO-INCHES)
1. BRASS PER QQ-B-626
2. BRASS PER QQ-B-613
3. GOLD PL. 3 MIN. THICK OVER NICKEL PL. 100 MIN. THICK OVER COPPER STRIKE
4. BERYLLIUM COPPER PER QQ-C-530
5. GOLD PL. 30 MIN. THICK OVER NICKEL PL. 100 MIN. THICK OVER COPPER STRIKE
6. TEFLON MIL-P-19468

1. CRIMPED FERRULE
HEX CRIMP SIZE .128"
2. CONTACT PIN TO SOLDER

NO.	DESCRIPTION	MATERIAL	FINISH	Q'TY	DRAWING NO.
6	FERRULE	COPPER	NOTE 3	1	FR-38/24X55C
5	COVER	NOTE 2	NOTE 3	1	CV-29X05-T
4	RETAINER RING	NOTE 4	NOTE 3	1	MMCX1121A1-5-C
3	CONTACT PIN	NOTE 1	NOTE 5	1	MMCX1112A1-4-B
2	INSULATOR	NOTE 6	NATURAL	1	MMCX1112A1-3T -50-B
1	HOUSING WITH BODY	NOTE 1	NOTE 3	1	MMCX1112A1-1S-17/1-B

DIMENSIONS ARE IN MILLIMETERS
UNLESS OTHERWISE SPECIFIED TOLERANCES
0.5-6 = ±0.2
6-30 = ±0.4
30-120 = ±0.6
120-315 = ±1
315-1000 = ±1.6
1000-2000 = ±2.4

SCALE 6/1 ISSUE A

PART NO. MMCX1112A1-3GT30G-14-50

APPROVED DATE 10-11-01'

CHECKED DATE 10-11-01'

DRAWN DATE 10-11-01'

FILE NO.

Amphenol

TITLE MMCX R/A CRIMP PLUG (FOR RG-178B/U,196A/U)

DRAWING NO. KJ-MMCX1112A1-3GT30G-196AU-50

ITEM NO.

Downloaded from Elcodis.com electronic components distributor