REVISIONS		
ISS	ZONE	DESCRIPTION\PER REQUEST\DATE

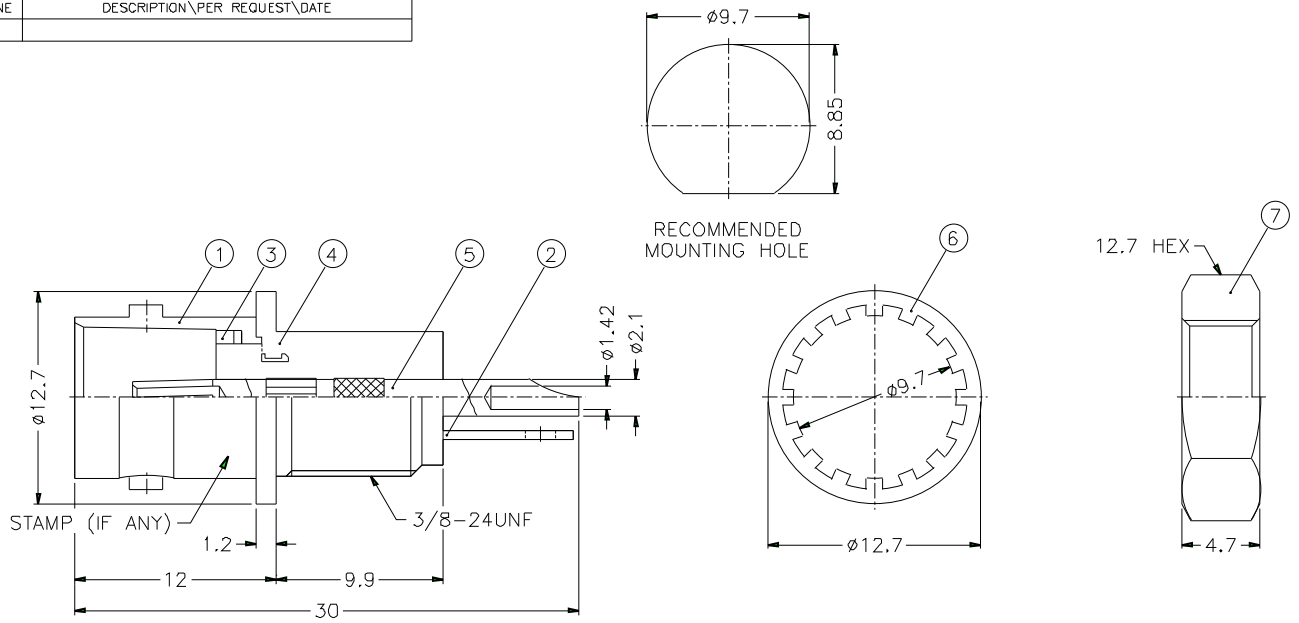

1. MAX. PANEL THICKNESS=3.2mm

NOTES: FINISH (PLATING THICKNESS IN MICRO-INCHES)
1. BRASS PER QQ-B-626
2. BRASS PER QQ-B-613
3. NICKEL PL. 100 MIN. THICK OVER COPPER STRIKE
4. PHOSPHOR BRONZE PER QQ-B-750
5. GOLD PL. 3 MIN. THICK OVER NICKEL PL. 100 MIN. THICK OVER COPPER STRIKE
6. BRIGHT TIN PL. 200 MIN. THICK OVER NICKEL PL. 50 MIN. THICK OVER COPPER PL. 100 MIN. THICK

RECOMMENDED TORQUE: A MAXIMUM TORQUE OF 12 INCH-LBS MAY BE APPLIED ON HEX NUT WHEN MOUNTING CONNECTOR IN PANEL.

NO.	DESCRIPTION	MATERIAL	FINISH	Q'TY	DRAWING NO
7	HEX NUT	NOTE 1	NOTE 3	1	HN127-3/8-24X 47
6	LOCK WASHER	NOTE 2	NOTE 3	1	LW-127/97X05
5	CONTACT PIN	NOTE 4	NOTE 5	1	B7300-5
4	INSULATOR	NYLON	WHITE	1	B6651B1-1-75-C
3	LOCK RING	NOTE 2	NOTE 3	1	
2	BRAID GROUNDING	NOTE 2	NOTE 6	1	
1	BODY	NOTE 1	NOTE 3	1	

DIMENSIONS ARE IN MILLIMETERS

UNLESS OTHERWISE SPECIFIED TOLERANCES
0.5-6 = ±0.2
6-30 = ±0.4
30-120 = ±0.6
120-315 = ±1
315-1000 = ±1.6
1000-2000 = ±2.4

SCALE 3/1 ISSUE A

PART NO. B6651B1-NNYL3G-75

APPROVED DATE 10-11-01'

CHECKED DATE 10-11-01'

DRAWN DATE 10-11-01'

FILE NO

Amphenol

TITLE BNC BULKHEAD RECEPT. ISOLATED JACK

DRAWING NO. KJ-B6651B1-NNYL3G-75

ITEM NO.

Downloaded from Elcodis.com electronic components distributor