| REVISIONS | | |
|---|---|---|
| ISS | ZONE | DESCRIPTION\PER REQUEST\DATE |
| | | |

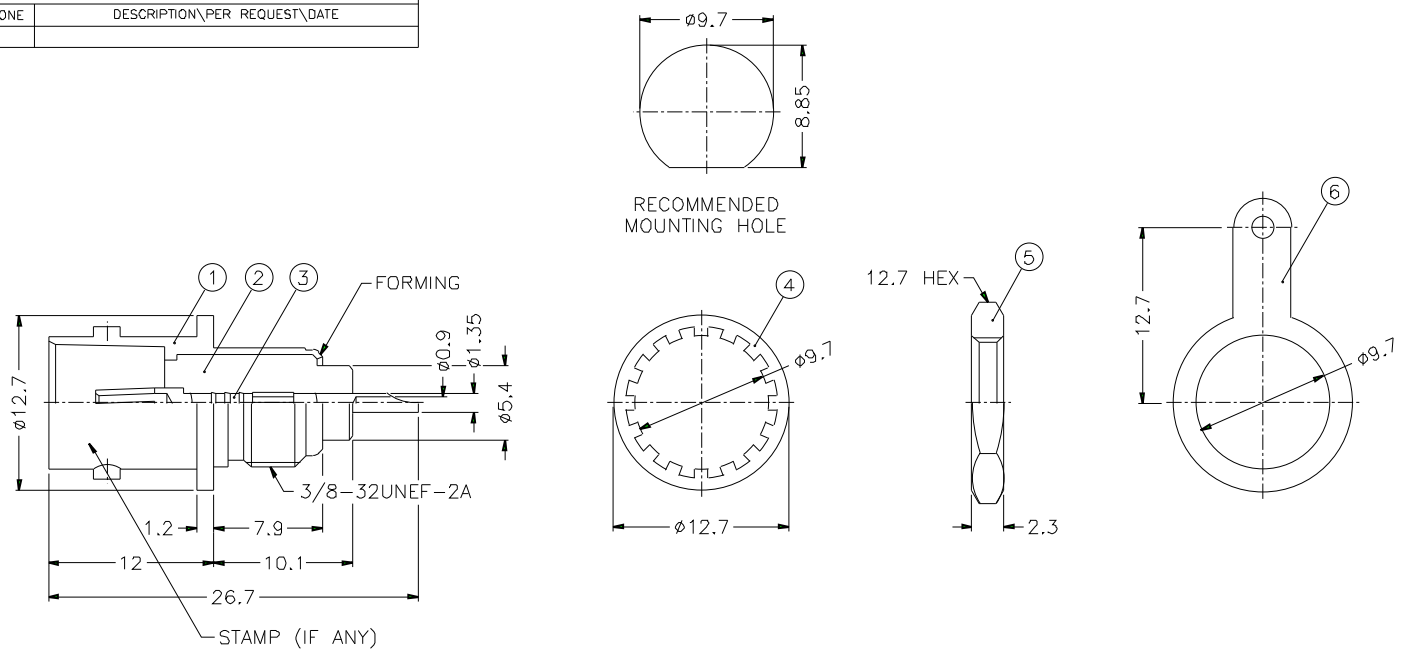


NOTES: FINISH (PLATING THICKNESS IN MICRO-INCHES)
1. BRASS PER QQ-B-626
2. BRASS PER QQ-B-613
3. NICKEL PL. 100 MIN. THICK OVER COPPER STRIKE
4. PHOSPHOR BRONZE PER QQ-B-750
5. GOLD PL. 3 MIN. THICK OVER NICKEL PL. 100 MIN. THICK OVER COPPER STRIKE

1. MAX. PANEL THICKNESS=3.2mm

| NO. | DESCRIPTION | MATERIAL | FINISH | Q'TY | DRAWING NO. |
|---|---|---|---|---|---|
| 6 | SOLDER TAG | NOTE 2 | NOTE 3 | 1 | B7310-7 |
| 5 | HEX NUT | NOTE 1 | NOTE 3 | 1 | HN127-3/8-32 X23 |
| 4 | LOCK WASHER | NOTE 2 | NOTE 3 | 1 | LW-127/97X05 |
| 3 | CONTACT PIN | NOTE 4 | NOTE 5 | 1 | B7310-3-75 |
| 2 | INSULATOR | DELRIN | NATURAL | 1 | B7310-2-75 |
| 1 | BODY | NOTE 1 | NOTE 3 | 1 | B7310-1 |

DIMENSIONS ARE IN MILLIMETERS

UNLESS OTHERWISE SPECIFIED TOLERANCES
0.5-6 = ±0.2
6-30 = ±0.4
30-120 = ±0.6
120-315 = ±1
315-1000 = ±1.6
1000-2000 = ±2.4

SCALE 2.5/1 | ISSUE A

PART NO. B6351B1-ND3G-75

APPROVED DATE 10-11-01'

CHECKED DATE 10-11-01'

DRAWN DATE 10-11-01'

FILE NO.

**Amphenol**

TITLE BNC BULKHEAD RECEPT. JACK

DRAWING NO. KJ-B6351B1-ND3G-75

ITEM NO.

Downloaded from Elcodis.com electronic components distributor