REVISIONS		
ISS	ZONE	DESCRIPTION\PER REQUEST\DATE

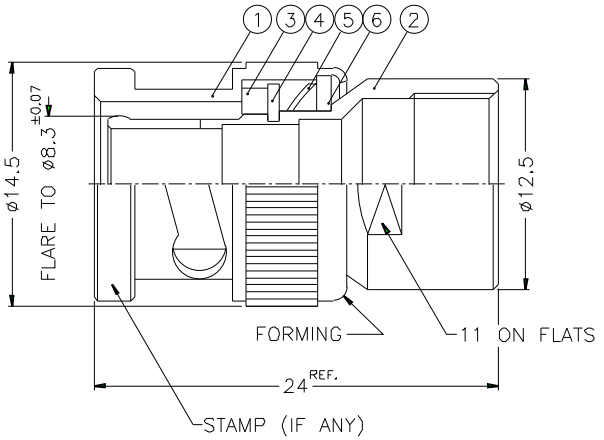

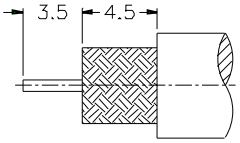

RECOMMENDED
CABLE STRIPPING DIM'S

1. CRIMPED CONTACT PIN
HEX CRIMP SIZE .068"

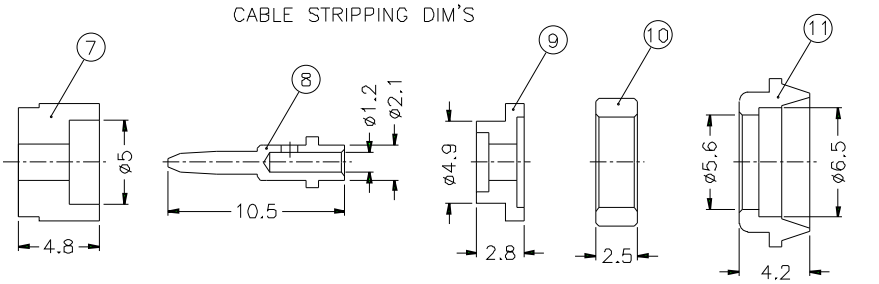

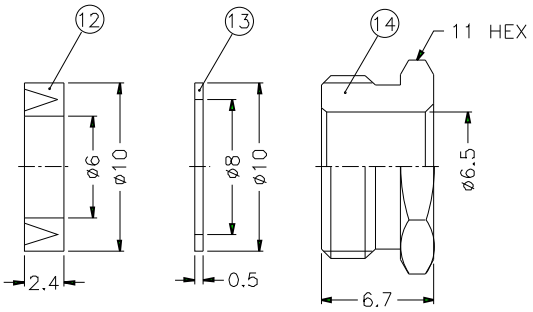

NO.	DESCRIPTION	MATERIAL	FINISH	Q'TY	DRAWING NO.
14	HEX NUT	NOTE 1	NOTE 3	1	B5200-14-11/65
13	WASHER	NOTE 2	NOTE 3	1	WS-10/8X05
12	GASKET	SILICONE	RED	1	B5200-12
11	BRAID CLAMP	NOTE 1	NOTE 3	1	B5200-11-65/56-B
10	RING	NOTE 1	NOTE 3	1	B5200-10
9	INSULATOR	DELRIN	NATURAL	1	B5200-9
8	CONTACT PIN	NOTE 1	NOTE 5	1	B5200-8-21/12
7	INSULATOR	DELRIN	NATURAL	1	B5200-7-75
6	WASHER	NOTE 2	NOTE 3	1	WS-128/9X08
5	SPRING	SK5	NOTE 4	1	B50000-6
4	RETAINER RING	NOTE 1	NOTE 3	1	B50000-5
3	GASKET	RUBBER	RED	1	GS-115/8X15
2	BODY	NOTE 1	NOTE 3	1	B5200-2-A
1	SHELL	NOTE 1	NOTE 3	1	B50000-1-B

NOTES: FINISH (PLATING THICKNESS IN MICRO-INCHES)
1. BRASS PER QQ-B-626
2. BRASS PER QQ-B-613
3. NICKEL PL. 100 MIN. THICK OVER COPPER STRIKE
4. NICKEL PL. 200 MIN. THICK OVER COPPER STRIKE
5. GOLD PL. 3 MIN. THICK OVER NICKEL PL. 100 MIN. THICK OVER COPPER STRIKE

DIMENSIONS ARE IN MILLIMETERS

UNLESS OTHERWISE SPECIFIED TOLERANCES
0.5-6 = ±0.2
6-30 = ±0.4
30-120 = ±0.6
120-315 = ±1
315-1000 = ±1 6
1000-2000 = ±2 4

SCALE 3/1 | ISSUE A | FILE NO.

PART NO. B1141A1-ND3G-3-75

APPROVED DATE 10-11-01'

CHECKED DATE 10-11-01'

DRAWN DATE 10-11-01'

Amphenol

TITLE
BNC CLAMP PLUG

DRAWING NO.
KJ-B1141A1-ND3G-59U-75

ITEM NO.

Downloaded from Elcodis.com electronic components distributor