NOTES:
1. MATERIALS AND FINISHES(PLATING THICKNESS IN MICRO-INCHES):
   BODY - BRASS, NICKEL PLATING
   CONTACT - BRASS, GOLD PLATING
   INSULATOR - PTFE, NATURAL
2. ELECTRICAL:
   A. IMPEDANCE: 75 OHM
   B. FREQUENCY RANGE: DC-3 GHz
   C. RETURN LOSS: BETTER THAN 35 dB @ 0-1 GHz;
   30 dB @ 1-2 GHz;
   26 dB @ 2-3 GHz
   D. DIELECTRIC WITHSTANDING VOLTAGE: 1500 VRMS, MIN.
3. MECHANICAL:
   A. DURABILITY: 500 CYCLES MIN.
   B. TEMPERATURE RANGE: -65°C TO +165°C
4. CRIMPED FERRULE
   HEX CRIMP SIZE .278"
5. CONTACT PIN TO SOLDER OR
   HEX CRIMP SIZE .066"

THIRD ANGLE PROJ.

REVISIONS

| REV | DESCRIPTION | DATE | ECO | APPR |
|---|---|---|---|---|
| 1 | PRELIMINARY RELEASE | 07-Jan-09 | | RL |
| 2 | SEE SHEET 1 | 06-Feb-09 | | RL |
| 3 | ADDED CUSTOMER NO. | 11-May-09 | | RL |

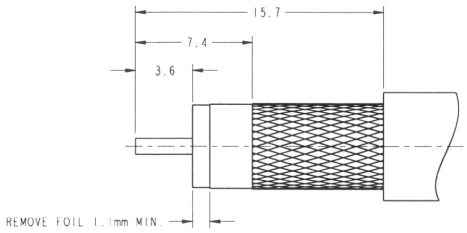


RECOMMENDED
CABLE STRIPPING DIM'S

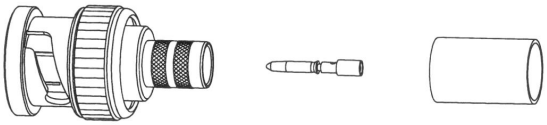

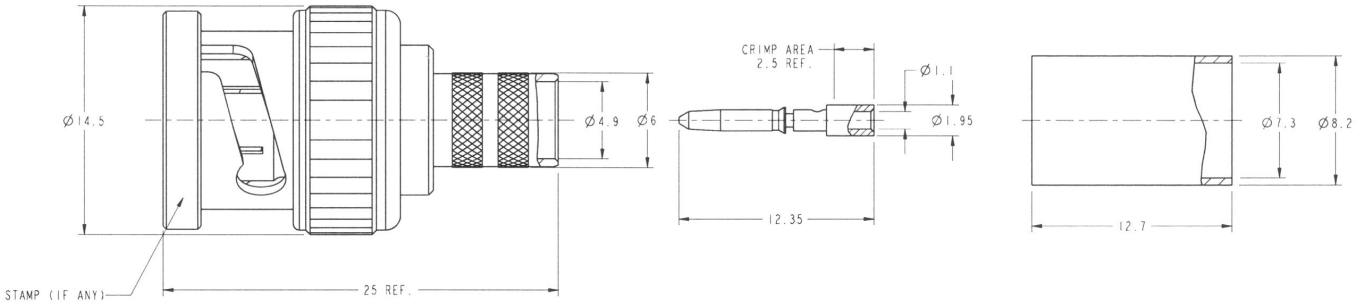


**CUSTOMER OUTLINE DRAWING**
ALL OTHER SHEETS ARE FOR INTERNAL USE ONLY

UNLESS OTHERWISE SPECIFIED, DIMENSIONS ARE IN METRIC AND TOLERANCES ARE:

| 0.5 - 6mm | 6 - 30mm | 30 - 120mm | ANGLES |
|---|---|---|---|
| ±0.1mm | ±0.2mm | ± 0.3mm | ±1° |

NOTICE - These drawings, specifications, or other data (1) are, and remain the property of Amphenol corp. (2) must be returned upon requiest; and (3) arre confidential and not to be disclosed to any person other than those to whom they are given by Amphenol Corp. the funishing of these drawings, specifications, or other data by Amphenol Corp., or to any other person to anyone for any purpose is not to be regarded by implicatioin or otherwise in any manner licensing, granting rights to permitting such holder or any other spersor to manufacture, use or sell any product, process or design, patented or otherwsie, that may in any way be related to or disclosed by said drawings, specifications, or other data.

MATERIAL

REFERENCE

FINISH

| | | |
|---|---|---|
| DRAWN R.LUO | DATE 11-May-09 | |
| ENGINEER HARRY | DATE 11-May-09 | |
| APPROVED SCOTT | DATE 11-May-09 | |
| CAD FILE I:\BNC\B1121A8-013-NT3G-75 | | |

TITLE
BNC CRIMP PLUG
(FOR DRAKA 1.0/4.8 AF
CABLE) HDTV

SCALE: 4.0:1.0 | SHEET 2 OF 2

| DWG SIZE | CODE ID | REV |
|---|---|---|
| B | 74868 | 3 |

Amphenol RF
Danbury CT USA, Tainan, Taiwan, Shenzhen, China
www.amphenolrf.com

DRAWING NO. B-1048-75

ITEM NO. 011121AMDAINA7F

PART NO.

Downloaded from Elcodis.com electronic components distributor