REVISIONS		
ISS	ZONE	DESCRIPTION\PER REQUEST\DATE

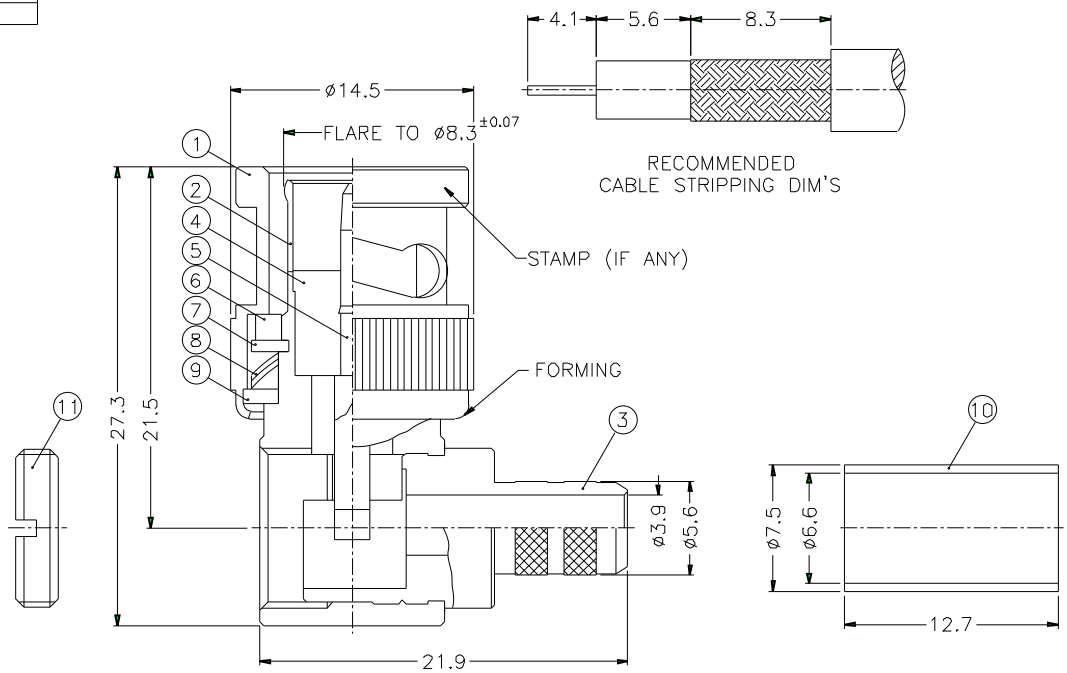

NOTES: FINISH (PLATING THICKNESS IN MICRO-INCHES)
1. BRASS PER QQ-B-626
2. BRASS PER QQ-B-613
3. NICKEL PL. 100 MIN. THICK OVER COPPER STRIKE
4. NICKEL PL. 200 MIN. THICK OVER COPPER STRIKE
5. GOLD PL. 30 MIN. THICK OVER NICKEL PL. 100 MIN. THICK OVER COPPER STRIKE
6. JIS H 3250, C 2700

1. CRIMPED FERRULE HEX CRIMP SIZE .255"
2. CONTACT PIN TO SOLDER

NO.	DESCRIPTION	MATERIAL	FINISH	Q'TY	DRAWING NO.
11	NUT	NOTE 1	NOTE 3	1	B5291-14
10	FERRULE	NOTE 6	NOTE 3	1	FR-75/66X127
9	WASHER	NOTE 2	NOTE 3	1	WS-128/9X0B
8	SPRING	SK5	NOTE 4	2	B5000D-6
7	RETAINER RING	NOTE 1	NOTE 3	1	B5000D-5
6	GASKET	RUBBER	RED	1	GS-115/8X15
5	CONTACT PIN	NOTE 1	NOTE 5	1	B5091-6-75-B
4	INSULATOR	DELRIN	NATURAL	1	B5091-5-75
3	BARREL	NOTE 1	NOTE 3	1	B5091-3-56/39
2	HOUSING	NOTE 1	NOTE 3	1	B5091-2
1	SHELL	NOTE 1	NOTE 3	1	B5000D-1-B

DIMENSIONS ARE IN MILLIMETERS
UNLESS OTHERWISE SPECIFIED TOLERANCES
0.5-6 = ±0.2
6-30 = ±0.4
30-120 = ±0.6
120-315 = ±1
315-1000 = ±1 6
1000-2000 = ±2 4

SCALE 3/1 ISSUE A

PART NO. B1112A1-ND3G-3-75

APPROVED DATE 10-11-01'

CHECKED DATE 10-11-01'

DRAWN DATE 10-11-01'

FILE NO.

Amphenol

TITLE BNC R/A CRIMP PLUG

DRAWING NO. KJ-B1112A1-ND3G-59U-75

ITEM NO.

Downloaded from Elcodis.com electronic components distributor