THIS DRAWING IS UNPUBLISHED. RELEASED FOR PUBLICATION 14-9-01 .14-9-01
© COPYRIGHT 2001 BY TYCO ELECTRONICS CORPORATION. ALL RIGHTS RESERVED.

LOC	DIST
E	B

REVISIONS

P	LTR	DESCRIPTION	DATE	DWN	APVD
	A	RELEASE FOR PRODUCTION	14-9-01	RG	FWK

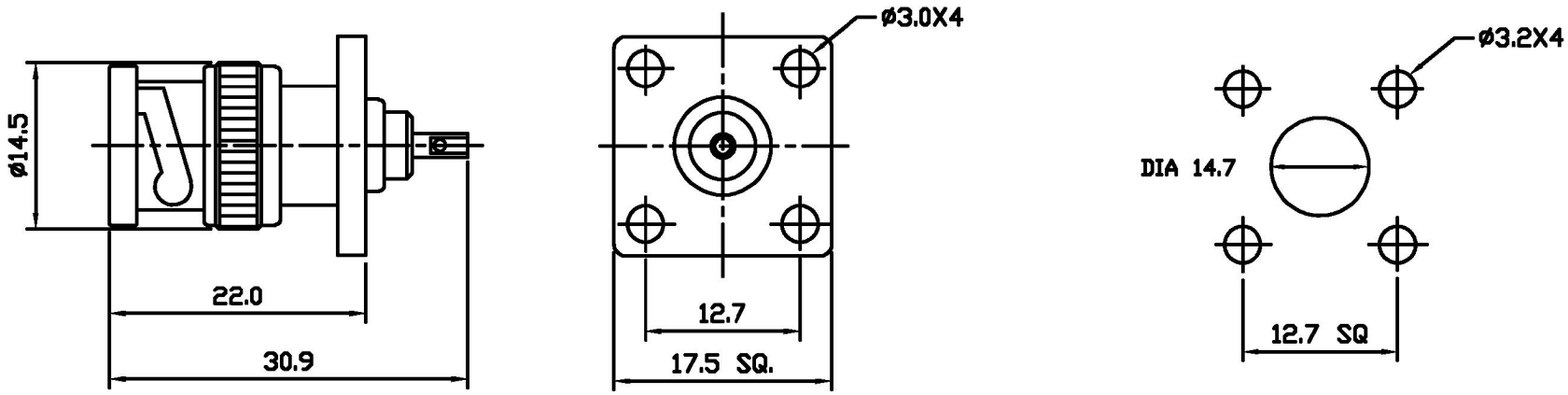

RECOMMENDED PANEL CUT OUT DIMENSIONS

ALL DIMENSIONS ARE NOMINAL. FOR REFERENCE ONLY.

BAG	SINGLE ITEM	1-1478052-0
PACK TYPE	DESCRIPTION	PART NUMBER

HANDTOOL PART NUMBER	N/A
FOR USE ON CABLES	N/A
CONNECTOR PLATING DETAIL	SILVER
CONTACT PLATING DETAIL	SILVER
DIELECTRIC MATERIAL	PTFE
GASKET MATERIAL	WHITE SILICONE RUBBER

THIS DRAWING IS A CONTROLLED DOCUMENT.

DIMENSIONS: MM

TOLERANCES UNLESS OTHERWISE SPECIFIED:
0 PLC ±–
1 PLC ±–
2 PLC ±–
3 PLC ±–
4 PLC ±–
ANGLES ±–

MATERIAL –
FINISH –

DWN R GOODALL 14-9-01
CHK F W-KING 14-9-01
APVD F W-KING 14-9-01
PRODUCT SPEC 108-3435
APPLICATION SPEC –
WEIGHT –

Tyco Electronics
Tyco Electronics Corporation
Stanmore, Middlesex, HA7 4RS

NAME BNC PANEL PLUG 75 OHM

SIZE A3 | CAGE CODE 00779 | DRAWING NO C-1478052 | RESTRICTED TO –

CUSTOMER DRAWING | SCALE NTS | SHEET 1 OF 1 | REV A

AMP 1470-19 REV 31MAR2000

G:\Engineering\Devon Engineering\MACOM GREENPAR COAX\1478 drwgs AMENDED\complete-ready for REDC\1478052-C.dwg

Downloaded from Elcodis.com electronic components distributor