NOTES:
1. MATERIALS AND FINISHES:
   BODY - BRASS, GOLD PLATING
   CONTACT - BRASS, GOLD PLATING
   INSULATOR - PEEK OR LCP
2. ELECTRICAL:
   A. IMPEDANCE: 50 OHM
   B. FREQUENCY RANGE: DC - 18 GHz
   C. VSWR(RETURN LOSS): 1.10 (26 dB), MAX. DC - 6 GHz
   1.15 (23 dB), MAX. 6 - 10 GHz
   1.32 (17 dB), MAX. 10 - 18 GHz
   D. DIELECTRIC WITHSTANDING VOLTAGE: 500 VRMS, MIN.
3. PHYSICAL:
   A. DURABILITY: 500 CYCLES MIN.
   B. ENGAGEMENT FORCE: 2 LB [9 N] MAX
   C. DISENGAGEMENT FORCE: .5 LB [2.2 N] MIN
   D. INNER CONTACT RETENTION FORCE: 1.5 LB [7 N] MIN
   E. TEMPERATURE RANGE: -65° C TO 165° C
4. PACKAGING:
   A. QUANTITY: SINGLE PACK
   B. MARKING:
      AMPHENOL
      SMP-MSSB-PCT-1
      DATE CODE
      QTY

SMP-MSSB-PCT-1	REVISIONS				
DRAWING NO.	REV	DESCRIPTION	DATE	ECO	APPR
THIRD ANGLE PROJ.	A	RELEASE TO MFG.	8/31/06	46217	HP

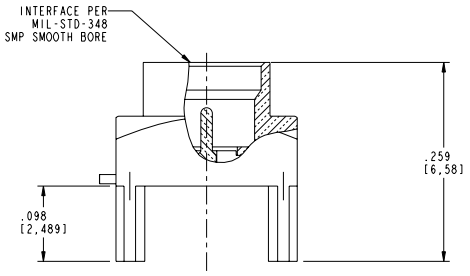

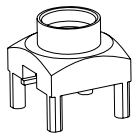

SCALE 4.000

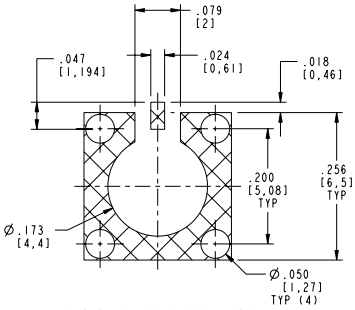

RECOMMENDED PCB PAD LAYOUT

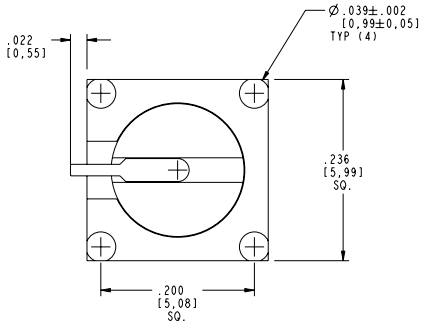

CUSTOMER OUTLINE DRAWING

ALL OTHER SHEETS ARE FOR INTERNAL USE ONLY

UNLESS OTHERWISE SPECIFIED, DIMENSIONS ARE IN INCHES AND TOLERANCES ARE:
2 PLACE DECIMAL ±.015 (0,381 mm) 3 PLACE DECIMAL ±.005 (0,127 mm) ANGLES ± 1°

NOTICE - These drawings, specifications, or other data (1) are, and remain the property of Amphenol Corp. (2) must be returned upon request; and (3) are confidential and not to be disclosed to any person other than those to whom they are given by Amphenol Corp. The furnishing of these drawings, specifications, or other data by Amphenol Corp., or to any other person to anyone for any purpose is not to be regarded by implication or otherwise in any manner licensing, granting rights or permitting such holder or any other person to manufacture, use or sell any product, process or design, patented or otherwise, that may in any way be related to or disclosed by said drawings, specifications, or other data.

MATERIAL

REFERENCE
EAR #283

DRAWN H. PARIKH	DATE 10-Aug-06	TITLE SMP JACK, PIN CONTACT PCB RECEPTACLE SMOOTH BORE
ENGINEER H. PARIKH	DATE 10-Aug-06	
APPROVED O. BARTHELMES	DATE 8/16/06	

Amphenol RF
Danbury, CT, USA
Tainan, Taiwan
Shenzhen, China
www.amphenolrf.com

SCALE: 8.0:1 SHEET 1 OF 2

CAD FILE	CODE ID	DWG SIZE	DRAWING NO.	REV
SMP-MSSB-PCT-1	74868	B	SMP-MSSB-PCT-1	A

Downloaded from Elcodis.com electronic components distributor