REV.	DATE	DESCRIPTION
NC	05/28/97	INITIAL RELEASE

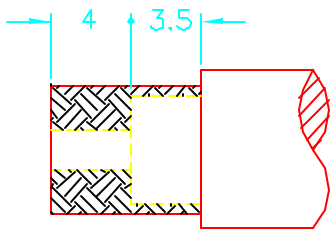

RECOMMENDED
CABLE STRIPPING DIM'S

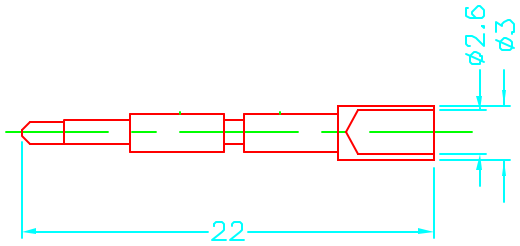

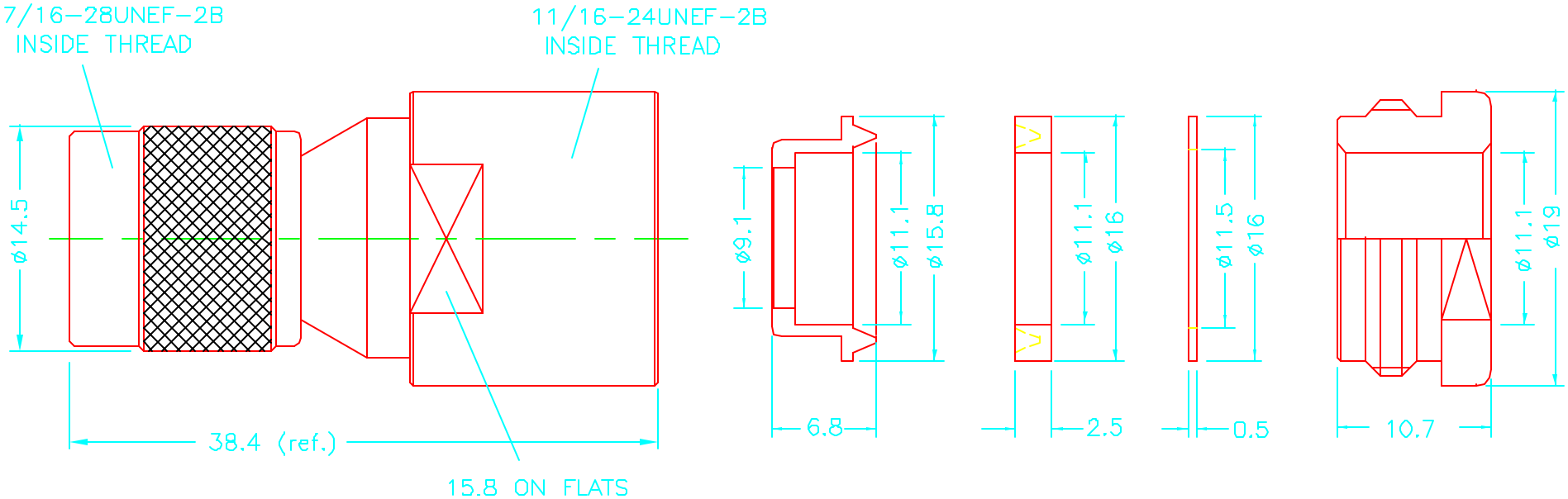

	DESCRIPTION	MATERIAL	FINISH
1	BODY	BRASS	NICKEL
2	INSULATOR	TEFLON	NATURAL
3	CONTACT PIN	BRASS	GOLD
4	GASKET	SILICONE	RED
5			
6			
7			
8			

DIMENSIONS ARE IN MILLIMETERS
UNLESS OTHERWISE SPECIFIED TOLERANCES ARE:

0.5–6 = ± 0.2
6–30 = ± 0.4
30–120 = ± 0.6
120–315 = ± 1
315–1000 = ± 1.6
1000–2000 = ± 2.4

DO NOT SCALE DRAWING

APPROVALS		DATE
DRAWN	G.R.S.	05/28/97
CHECKED		
ISSUED		

Connex
Connector Corporation

TITLE: TNC CLAMP PLUG (FOR 8/U, 213/U CABLE)

SIZE	FSCM NO.	DWG. NO.	REV.
A	99001	122381.DWG	NC

SCALE	PART NO.	SHEET
2.5:1	122381	1 OF 1

Downloaded from Elcodis.com electronic components distributor