ALL RIGHTS RESERVED. NO PORTION OF THIS PUBLICATION, WHETHER IN WHOLE OR IN PART CAN BE REPRODUCED WITHOUT THE EXPRESS WRITTEN CONSENT OF SPC TECHNOLOGY.

REVISIONS — DOC. NO. SPC-F005 • Effective: 12/21/98 • DCP No: 880

DCP #	REV	DESCRIPTION	DRAWN	DATE	CHECKD	DATE	APPRVD	DATE
2013	A	RELEASED	JN	01/12/09	JWM	01/12/09	JWM	01/12/09

RoHS Compliant

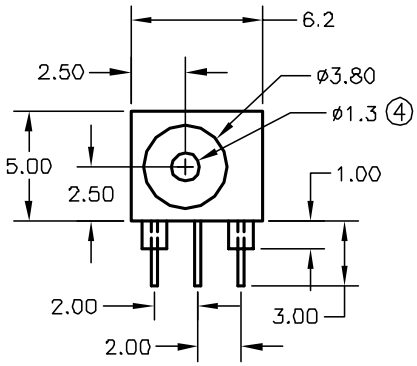

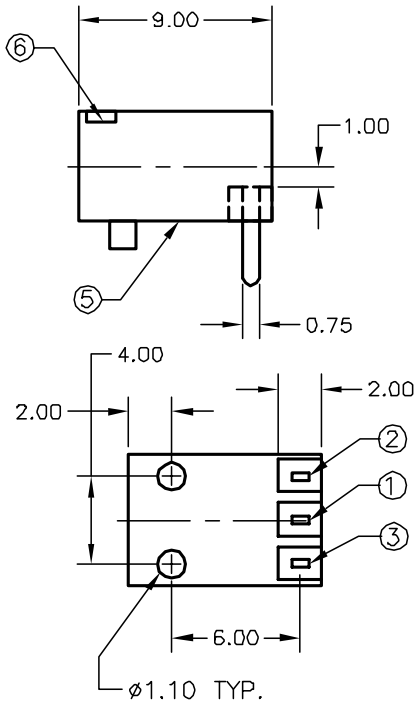

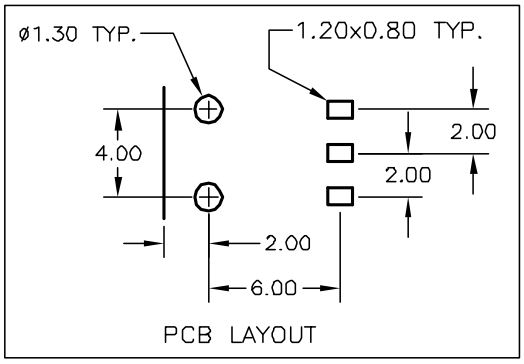

SPECIFICATIONS

ELECTRICAL
Contact rating: 1A at 20VDC
Contact Resistance: 30 milliohms Max. at 1A 20VDC
Insulation Resistance: 100 Megohms Min. at 500VDC
Dielectric Strength: 500VAC for one minute

MECHANICAL
Insertion Force: 0.5 to 2.0 kg
Withdrawal Force: 0.5 to 2.0 kg
Operating Life: 12,000 cycles

ENVIRONMENTAL
Storage temperature range: −40°C to 85°C
Operating temperature range: −40°C to 85°C
Humidity range: 10% RH TO 80% RH

PLATING
3.5 MICRON (138 MIRCOINCHES) Min. Silver Over
2.0 MICRON (79 MIRCOINCHES) Min. Copper Strike

SOLDERABILITY
95% Wetting Min. after 5 seconds dip in 230°C solder

Schematic	Item	Description	Material/Finish
	1	PIN TERMINAL	BRASS-SILVER PLATED 0.3T
	2	SLEEVE TERMINAL	PHOSPHOR BRONZE-SILVER PLATED 0.3T
	3	SLEEVE SHUNT	BRASS-SILVER PLATED 0.3T
	4	PIN	BRASS SILVER PLATED
	5	HOUSING	PPS UL94V0
	6	COVER	PPS UL94V0

DISCLAIMER:
ALL STATEMENTS AND TECHNICAL INFORMATION CONTAINED HEREIN ARE BASED UPON INFORMATION AND/OR TESTS WE BELIEVE TO BE ACCURATE AND RELIABLE. SINCE CONDITIONS OF USE ARE BEYOND OUR CONTROL, THE USER SHALL DETERMINE THE SUITABILITY OF THE PRODUCT FOR THE INTENDED USE AND ASSUME ALL RISK AND LIABILITY WHATSOEVER IN CONNECTION THEREWITH.

UNLESS OTHERWISE SPECIFIED, DIMENSIONS ARE FOR REFERENCE PURPOSES ONLY.

DRAWN BY:	DATE:
Jason Nash	01/12/09
CHECKED BY:	DATE:
JWM	01/12/09
APPROVED BY:	DATE:
JWM	01/12/09

SPC TECHNOLOGY

DRAWING TITLE: POWER JACK

SIZE	DWG. NO.	ELECTRONIC FILE	REV
A	SPC21373	11M0568.DWG	A

SCALE: NTS | U.O.M.: mm | SHEET: 1 OF 1

SPC-F005.DWG

Downloaded from Elcodis.com electronic components distributor