DIMENSIONS

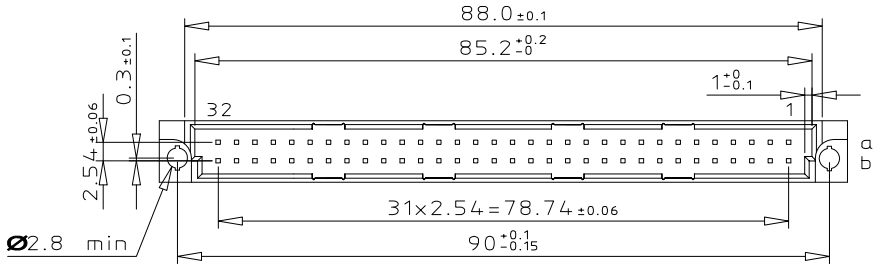

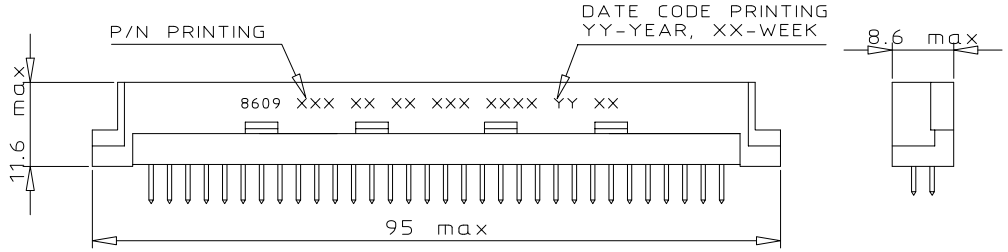

TERMINATION

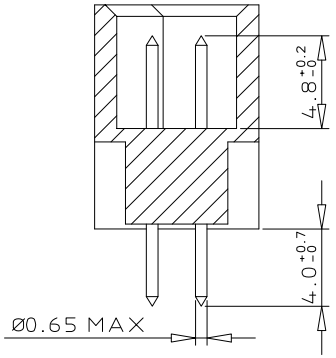

ORDERING INFORMATION

SERIES 8609	2	64	5	8	14	7	4	5	ELF

ROWS FITTED WITH CONTACTS
- ROW a b - . . . . . 2 — 64
- ROW a - - . . . . . 1 — 32

NO. OF CONTACTS

TYPE OF INSULATOR
- 2 ROW MALE INSULATOR 5

METHOD OF MOUNTING
- REVERSE MOUNTING - STYLE Q 8

TERMINATION
- STRAIGHT SPILL 14

OPTIONS
- NO OPTION 7

PERFORMANCE CLASS
- DIN 41612 CLASS 3 4
- DIN 41612 CLASS 2 5
- DIN 41612 CLASS 1 6
- AS PER MIL C 55302 / JSS 50808 8

PITCH PER ROW
- 2.54 mm 5

LEAD FREE VERSION . . . . . ELF

PCB LAYOUT

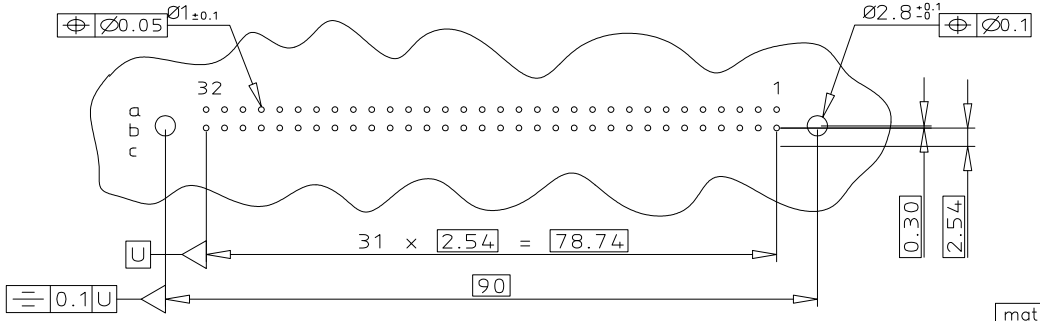

GENERAL CHARACTERISTICS & RoHS INFO

REFER DRAWING C-8609-0000A

ltr	ecn no	dr	date
A	105-0107	MINI	2005-05-19
B	105-0064	MINI	2006-06-01
C	108-0146	KR	2008-10-21

dr	MINI K V	2005-05-19
engr	RAKHEE G	2005-05-19
chr	KESAVAN R	2008-10-21
appd	KESAVAN R	2008-10-21

sheet index	revision sheet	C 1

mat'l. code: SEE DWG C-8609-0000A

surface: ISO 1302

tolerance: ISO 406 ISO 1101

tolerances unless otherwise specified: angles 0°±2°; linear 0.X ±0.1, 0.XX ±0.1, 0.XXX ±0.1

projection

mm

scale 3:2

product family: 8609

title: DIN REVERSE HEADER
STRAIGHT SPILL DIN 41612 STYLE Q

dwg no: C-8609-2060 — sheet 1 of 1 — size A3

type Product Customer Drawing

form: A3

Copyright FCI
FCIconnect.com
PDM: Rev:C STATUS:Released Printed: Sep 24, 2010
Downloaded from Elcodis.com electronic components distributor