THIS DRAWING IS UNPUBLISHED. RELEASED FOR PUBLICATION
© COPYRIGHT – BY TYCO ELECTRONICS CORPORATION. ALL RIGHTS RESERVED.

| LOC | DIST |
|---|---|
| ES | 00 |

REVISIONS

| F | LTR | DESCRIPTION | DATE | DWN | APVD |
|---|---|---|---|---|---|
| | 0 | RELEASED PER EC FB00-0249-04 | 5NOV04 | L.Z | I.E |

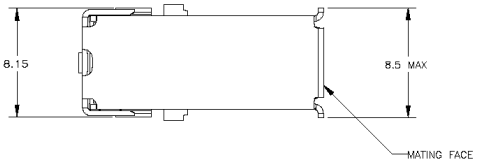


1. CONTACTS: BRASS; SHELL: PHOS BRONZE; INSERT: LCP, BLACK, UL 94V-0 RATED.
2. CONTACTS: (0.076μm MIN GOLD OVER 0.76μm MIN PALLADIUM-NICKEL) OR (0.76μm MIN GOLD) FOR A LENGTH OF 2 MIN ON MATING FACE END, 3.81μm MIN TIN FOR A LENGTH OF 3.75 MIN ON OPPOSITE END, ALL OVER 1.27μm MIN NICKEL; SHELL: 2~5μm MIN TIN.
3. COORDINATE DIMENSION APPLIES FROM CENTER OF ACTUAL FEATURE.
4. CONNECTOR SIDE OF PWB IS SHOWN.

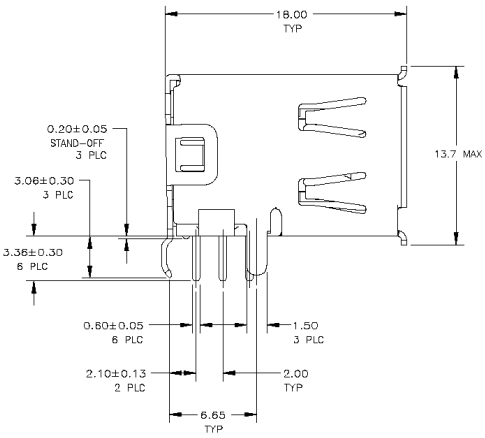


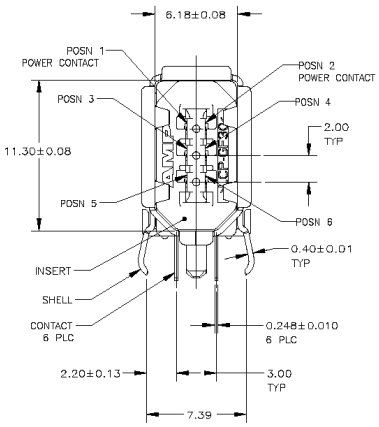


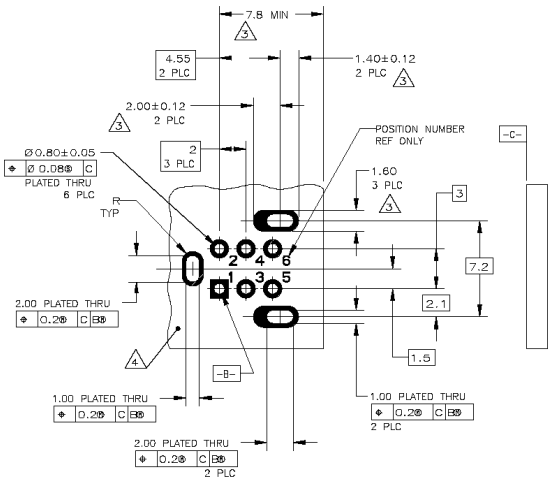


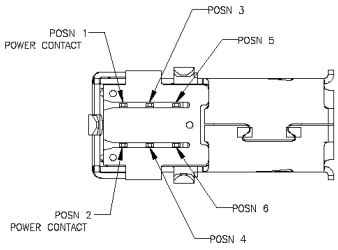


LEAD FREE

| IN TRAYS | 5787956-1 |
|---|---|
| PACKAGING | PART NO |

THIS DRAWING IS A CONTROLLED DOCUMENT.

DIMENSIONS: mm

TOLERANCES UNLESS OTHERWISE SPECIFIED:
0 PLC ± –
1 PLC ± –
2 PLC ± –
3 PLC ± –
4 PLC ± –
ANGLES ± –

MATERIAL – 1
FINISH – 2

DWN LEO ZHOU 05NOV04
CHK STEVEN YAO 05NOV04
APVD I.ENOMOTO 05NOV04
PRODUCT SPEC –
APPLICATION SPEC –
WEIGHT –

tyco Electronics
Tyco Electronics Corporation
SH/CN GuPingRD 669#

NAME
SOCKET ASSEMBLY, FLANGED, RIGHT-ANGLE UPRIGHT, IEEE P1394
–

| SIZE | CAGE CODE | DRAWING NO | RESTRICTED TO |
|---|---|---|---|
| A2 | 00779 | C-5787956 | – |

CUSTOMER DRAWING
SCALE 5:1 SHEET 1 OF 1 REV 0

AMP 1471-9 REV 31MAR2000

F:\All Guys\Leo zhou\8057707\787956\C 5787956_0.dwg

Downloaded from Elcodis.com electronic components distributor