Alle Rechte vorbehalten/ All rights reserved

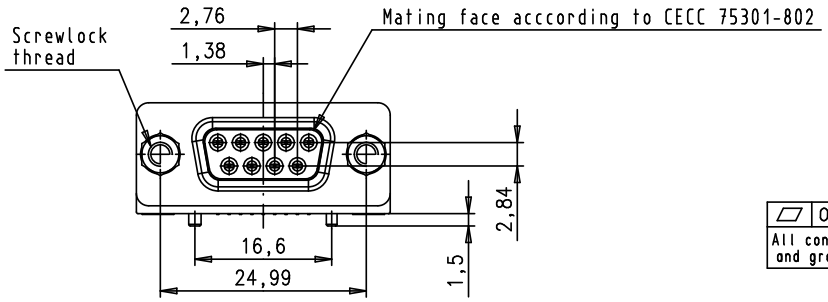

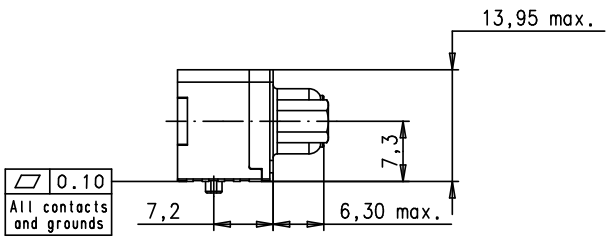

PCB Layout, component side (thickness 1.6 mm min.)

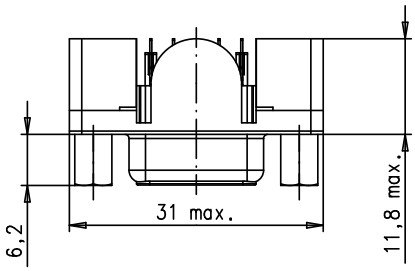

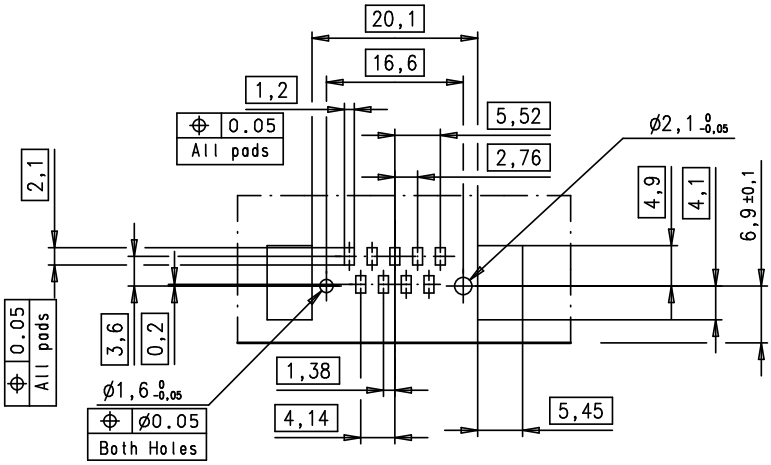

Max. Temperature : 260° during 10 seconds

Part number	PL	Thread	Index designation		Mod.	Dat.	Name
09551563613.741	1	4-40 UNC	Black Insulator	Reel Packaging (120 connectors) see page 2/2			
09551566613.741	2						
09551567613.741	3						
09551563633.741	1	M3			33929	25Jan2007	ED
09551566633.741	2				33785	17Jul2006	ED
09551567633.741	3				33773	30Jun2006	ED

	Dat.	Name
Detail.	30Jun2006	ED
Insp.		
Stand.		

All Dim. in mm
Orig. Size DIN A 4

HARTING EURL
F-95972 Paris

D-SUB SMT
Standard Female 9p
with die casted grounds
and screwlocks

Maßstab/ Scale: 1,5:1

TB 09 55 156 x6x3

Sub.

Blatt/ Page: 1/2

Downloaded from Elcodis.com electronic components distributor