FRONT VIEW

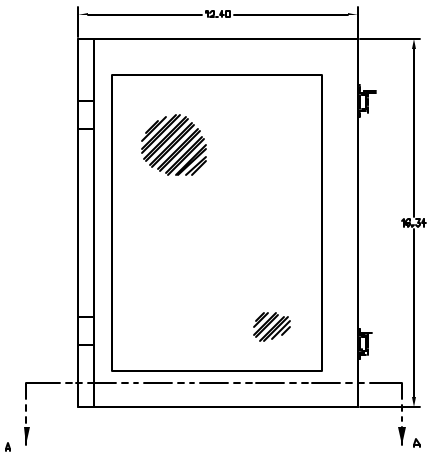

RIGHT SIDE VIEW

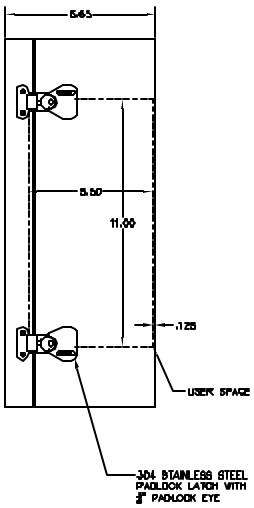

BASE
FRONT VIEW WITH COVER OPEN 180°

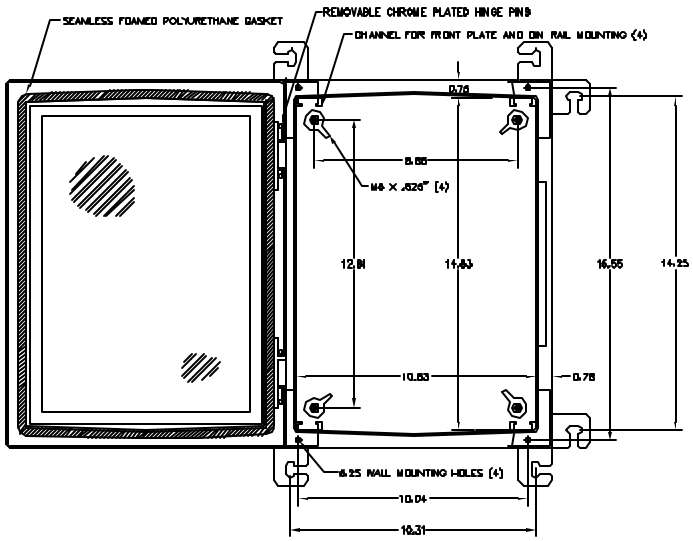

END VIEW

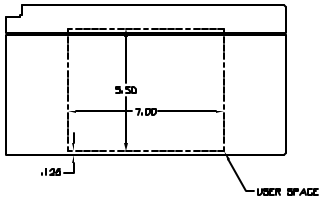

SECTION A-A

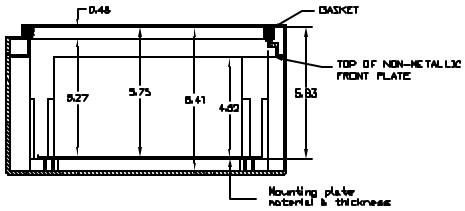

NOTES:
1. ENCLOSURE MATERIAL MADE OF BEIGE (RAL 7032) HOT MOLDED FIBERGLASS REINFORCED POLYESTER.
2. U.L. LISTED PER STD. 508.
3. CSA CERTIFIED PER STD. C22.2 NO. 94.
4. NEMA RATED TYPE 3, 3R, 3S, 4, 4X,12 AND 13.
5. IEC 529 RATED IP 66-11.
6. RESISTANT TO TEMPERATURES UP TO 150 DEG C.
7. SELF EXTINGUISHING AND HALOGEN FREE.
8. ACCESSORIES INCLUDE: BACK PANELS, HINGEABLE POLYESTER FRONT PLATES, DIN RAIL MOUNTING SYSTEM, PRINT POCKET, LOCKING HANDLES, AND VENTILATORS.
9. CABINETS ARE MAINTENANCE FREE AND CORROSION RESISTANT.

VYNCKIER ENCLOSURE SYSTEMS, INC.

ANB-1612PL
ARIA SERIES ENCLOSURE

Downloaded from Elcodis.com electronic components distributor