ENCLOSURES & ASSEMBLY SERVICES

BOX ENCLOSURES, INC
28915 N. Herky Drive Unit, 107,
LAKE BLUFF, IL 60044
TEL: 847-932-4700 WWW.BOXENCLOSURES.COM FAX: 847-932-4701

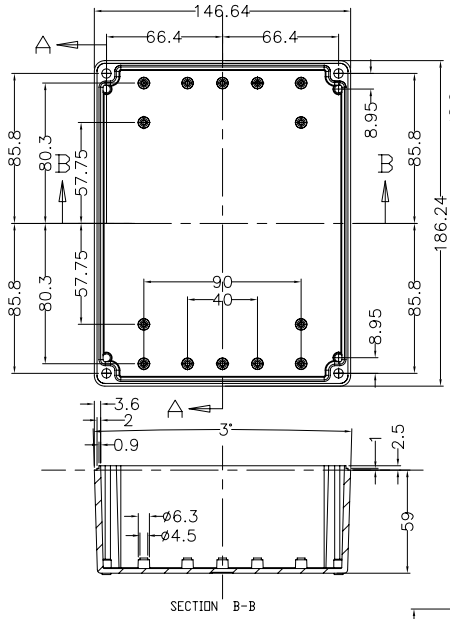

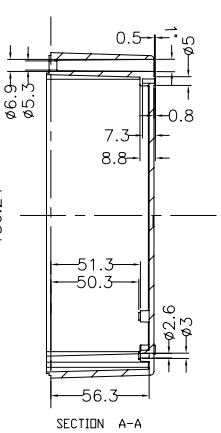

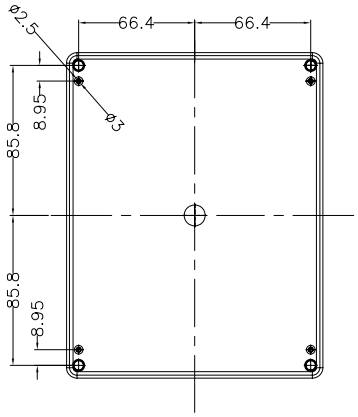

BEN-80 BOTTOM

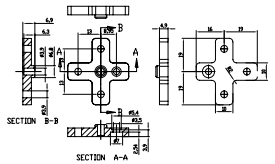

Wall Mount
Part #BEN-WM

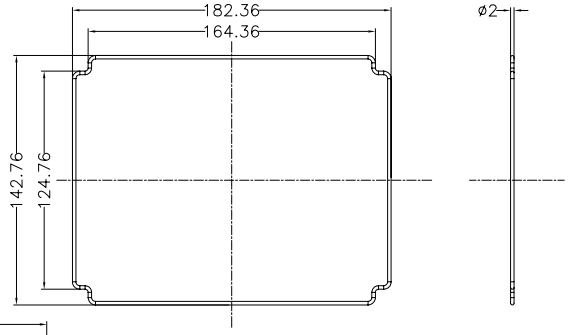

BEN-80 SEALING KIT

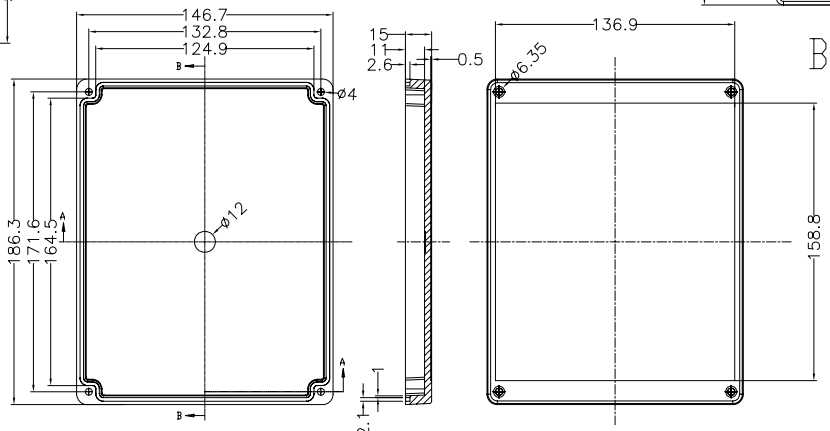

BEN-80 TOP

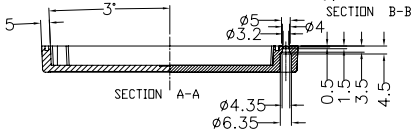

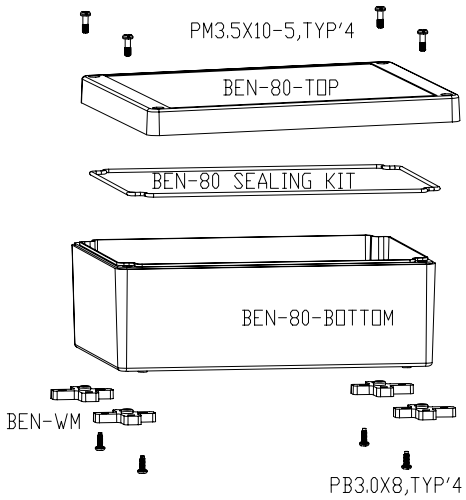

Part Number	Top Color	Bottom Color
BEN-80P	Grey	Grey
BEN-80PC	Clear	Grey
BEN-80P-BLK	Black	Black
BEN-80PC-BLK	Clear	Black
Optional Accessory		
Wall mount kit, pack of 4, color grey. Part # BEN-WM		
Material-Polycarbonate, fire retardant UL 94-V2 Sealing Kit-NEMA 4 / IP65, material-Silicone		

ENCLOSURES & ASSEMBLY SERVICES

Title: BEN-80 Master Drawing		Revision: 1.10
Material: Polycarbonate	TOLERANCE all dimension in mm unless otherwise specified. x ±0.20 .x ±0.10 .xx ±0.05 ANGLE ±0.5°	Drn. Date ZHONG2008-08-22
Finish: Polished		Fire rating: UL 94-V2
Pro.		Sealing rating: NEMA4 / IP65

THIS DRAWING IS THE PROPERTY OF AND MAY EMBODY PROPRIETARY INFORMATION OWNED BY Box Enclosures . IT IS PROVIDED UNDER A CONFIDENTIAL RELATIONSHIP FOR A SPECIFIC PURPOSE. THE RECIPIENT AGREES TO USE IT ONLY FOR SUCH PURPOSE AND RETURN IT TO Box Enclosure UPON REQUEST.

Downloaded from Elcodis.com electronic components distributor