Model 19

Window Diameter 4.25"

19SHT

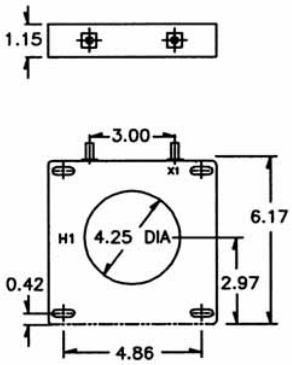

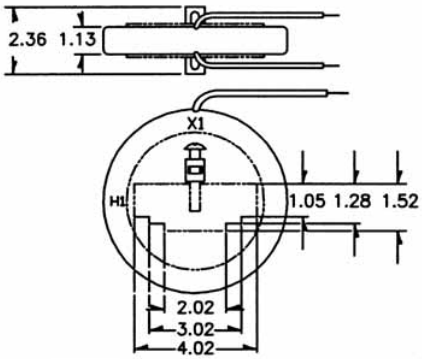

19RL (BUS BAR MOUNTING KIT SHOWN)

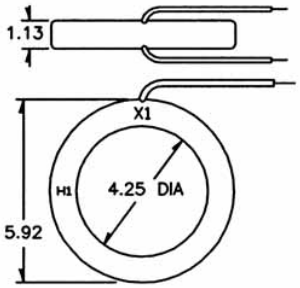

19RL

Catalogue Number	Current Ratio	V.A. for ±1% class	ANSI Metering class at 60Hz					Secondary winding resistance (OHMS @ 75˚C	Continuous thermal rating factor	
			B0.1	B0.2	B0.5	B0.9	B1.8		@30˚C	@55˚C
19**-301	300:5	4.0	0.6	0.6	2.4	2.4	4.8	0.048	2.0	2.0
19**-401	400:5	10.0	0.3	0.3	1.2	2.4	2.4	0.064	2.0	2.0
19**-501	500:5	15.0	0.3	0.3	0.6	1.2	2.4	0.087	2.0	1.5
19**-601	600:5	15.0	0.3	0.3	0.6	1.2	1.2	0.116	2.0	1.5
19**-751	750:5	25.0	0.3	0.3	0.3	0.6	1.2	0.145	1.5	1.33
19**-801	800:5	30.0	0.3	0.3	0.3	0.6	1.2	0.155	1.5	1.33
19**-102	1000:5	30.0	0.3	0.3	0.3	0.6	1.2	0.242	1.33	1.0
19**-122	1200:5	40.0	0.3	0.3	0.3	0.3	0.6	0.291	1.33	1.0
19**-152	1500:5	15.0	0.3	0.3	0.6	0.6	0.6	0.200	1.5	1.0
19**-162	1600:5	15.0	0.3	0.3	0.3	0.6	0.6	0.213	1.5	1.0
19**-202	2000:5	20.0	0.3	0.3	0.3	0.3	0.6	0.266	1.33	1.0
19**-252	2500:5	20.0	0.3	0.3	0.3	0.3	0.3	0.333	1.0	0.8
19**-302	3000:5	25.0	0.3	0.3	0.3	0.3	0.3	0.399	1.0	0.8

**NOTE: When ordering, prefix catalogue number with model designation required, i.e. 19RL – 301, or 19SHT – 301, etc.

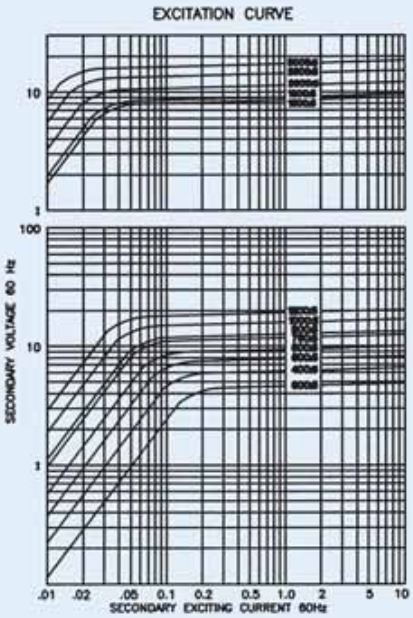

Application:
With ammeters, wattmeters and cross current compensation.

Frequency:
50-400Hz

Insulation Level:
600 Volts, 10kV BIL full wave

- Flexible leads are UL 1015 105°C, CSA approved #16 AWG, 24" long
- Non-standard length to be specified
- Terminals are brass studs No. 8 – 32 UNC with one flat washer, lockwasher and regular nut
- SFT and SHT case styles also available as SFL and SHL with leads
- Mounting bracket kit when required for Model 7SHT
- Approximate weight: 1.5 lbs

Approvals

c US **UL** 257877

CSA 223647

Downloaded from Elcodis.com electronic components distributor