AC 4C

SIZE :

120x120x38mm (4.72"x4.72"x1.50")

CONSTRUCTION :

- Die-cast aluminum housing
- Glass fiber reinforced plastic: Impeller are UL 94V-0 rating
- Impedance protected
- Leader wire or terminal is available

OPERATING TEMPERATURE :

Ball bearing - 30°C to +75°C

Sleeve bearing - 10°C to +70°C

WEIGHT :

500 grams

Specifications

Specifications are subject to change without notice

MODEL NO.	BEARING	RATED VOLTAGE	FREQUENCY	MAX. RATED CURRENT	MAX. INPUT POWER	SPEED	MAX. AIR FLOW		MAX. AIR PRESSURE		NOISE
		VAC	Hz	mA	W	R.P.M.	m³/min	CFM	mmH₂O	IN H₂O	dB-A
4C-115B-16	Ball	115	50/60	110/100	10/9	1550/1600	1.32/1.36	46.5/48	3.10/3.20	0.12/0.13	25/29
4C-115S-16	Sleeve										
4C-115LB	Ball	115	50/60	120/110	10/9	1800/1900	1.61/1.78	57/63	3.20/4.20	0.16/0.17	30/34
4C-115LS	Sleeve										
4C-230LB	Ball	230	50/60	65/60	10/9	1800/1900	1.61/1.78	57/63	3.20/4.20	0.16/0.17	30/34
4C-230LS	Sleeve										
4C-115MB	Ball	115	50/60	130/120	11/10	2350/2400	2.01/2.04	71/72	4.70/4.80	0.18/0.19	35/39
4C-115MS	Sleeve										
4C-230MB	Ball	230	50/60	108/107	11/10	2350/2400	2.01/2.04	71/72	4.70/4.80	0.18/0.19	35/39
4C-230MS	Sleeve										
4C-115HB	Ball	115	50/60	220/200	18/16	2650/3000	2.52/2.83	89/100	6.00/7.60	0.24/0.30	46/48
4C-115HS	Sleeve										
4C-230HB	Ball	230	50/60	135/110	22/19	2650/3000	2.52/2.83	89/100	6.00/7.60	0.24/0.30	46/48
4C-230HS	Sleeve										
4C-DVB	Ball	230/115	50/60	150/250	23/19	2650/3050	2.52/2.83	89/100	6.60/7.50	0.26/0.29	46/48
4C-DVS	Sleeve										

Dimensions (mm)

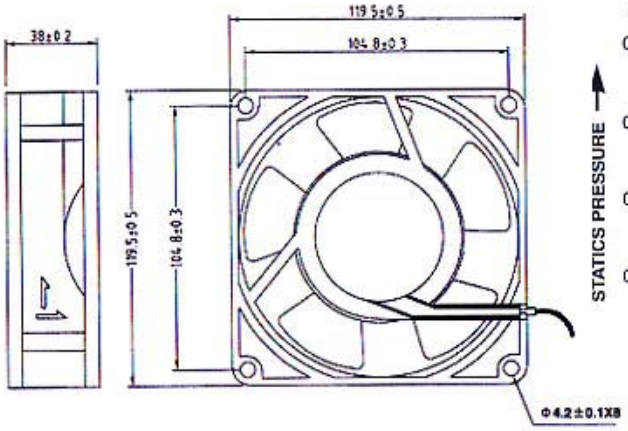

Performance Curve

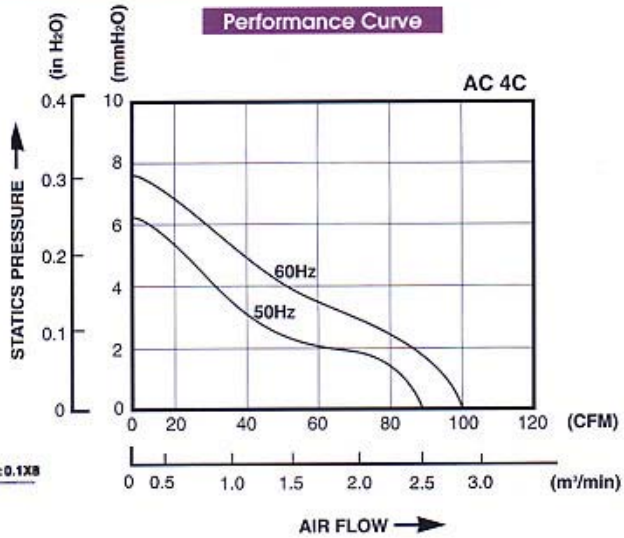

Downloaded from Elcodis.com electronic components distributor