FM Radio Transmitter & Receiver Modules T5 / R5

Features

- MINIATURE SIL PACKAGE
- FULLY SHIELDED
- DATA RATES UP TO 128KBITS/S
- RANGE UPTO 300 METRES
- SINGLE SUPPLY VOLTAGE
- INDUSTRY PIN COMPATIBLE

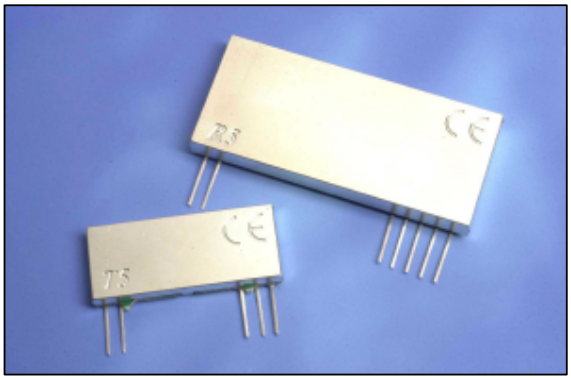

QFMT5-434

- TEMP RANGE -20°C to +55°C
- NO ADJUSTABLE COMPONENTS
- GOOD SHOCK RESISTANCE
- TEMPERATURE COMPENSATED RF OUTPUT

QFMR5-434

- HIGH SENSITIVTY
- ANALLOUGE, DIGITAL OUTPUTS
- SIGNAL STRENGTH OUTPUT (RSSI)
- ON BOARD AGC
- SINGLE CONVERSION FM SUPER-HET
- DOUBLE RF FILTERING (INC. SAW FRONT END)

Applications

- VEHICLE ALARM SYSTEMS
- REMOTE GATE CONTROLS
- GARAGE DOOR OPENERS
- DOMESTIC AND COMMERCIAL SECURITY

General Description

The QFMT5 and QFMR5 data link modules are miniature UHF radio modules, which enable the implementation of a simple telemetry link upto 300 metres, and at data rates of up to 128Kbit/s

The QFMT5 and QFMR5 modules will suit one-to-one and multi-node wireless links in applications including building and car security, remote industrial process monitoring and computer networking.

Because of its small size and low power requirements, these modules are ideal for use in portable battery powered wireless applications.

Connection Diagram

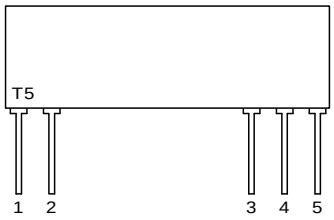

Figure 1: Transmitter

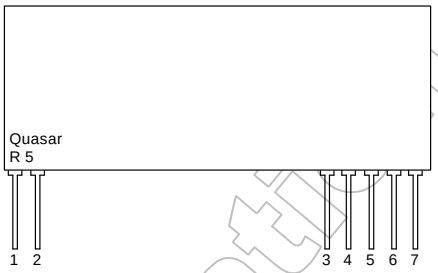

Figure 2: Receiver

Pin Description:

RF GND *(pin 1)*
RF ground pin, internally connected to pin 4 (0V). This pin should ideally be connected to the nearest ground plane (e.g. coax braid, main PCB ground plane etc.)

RF OUT *(pin2)*
50Ω RF antenna output. To achieve best results the antenna impedance must match that of the module.

V_{CC} *(pin 3)*
+Ve supply pin (3.0 to 9.0 volts). The module will generate RF when V_{CC} is present. It is strongly recommended that a 100nF capacitor decouples the supply rail as close as possible to this pin.

GND *(pin 4)*
Supply and data ground connection, connected to pin 1.

Data IN *(pin 5)*
This input has an impedance of 47KΩ and should ideally be driven by a CMOS logic drive or compatible. The drive circuitry should be supplied with the same supply voltage as the Tx module.

Ordering Information:

Part No	Description
QFMT5-434-5V	Transmitter 433.92MHz 5v
QFMT5-434-3V	Transmitter 433.92MHz 3v
QFMT5-434-128	Transmitter 433.92MHz 5v 128Kbps Data rate

RF IN (pin 1)
50 RF input from antenna, connect using shortest possible route. This input is isolated from the internal circuit using the air gap of the front end SAW RF filter

RF GND (pin 2)
RF ground connection, preferable connected to a solid plane.

RSSI (pin 3)
The Received Signal Strength Indicator provides a DC output voltage proportional to the RF input signal. The amplitude of the RSSI voltage increases with increasing RF signal strength.

GND (pin 4)
Connect to power supply ground.

V_{CC} (pin 5)
+Ve supply pin. Operation from a 5V supply able to source6mA at less than V_{p-p} ripple.

AF (pin 6)
Audio frequency output.

DATA OUT (pin 7)
CMOS compatible output. This may be used to drive external decoders.

Part No	Description
QFMR5-434-15	Receiver 433.92MHz 15Kbps Data rate
QFMR5-434-50	Receiver 433.92MHz 50Kbps Data rate
QFMR5-434-128	Receiver 433.92MHz 128Kbps Data rate

Absolute Maximum Ratings: Transmitter QFMT5

Operating temperature:	-20°C to +55°C
Storage temperature:	-40°C to +100°C
Supply Voltage (pin 3)	10V
Data input (pin 5)	10V
RF Out (pin 2)	±50V @ < 10MHz , +20dBm @ > 10MHz

Electrical Characteristics: Transmitter T5

	pin	Min.	typ.	Max.	units	notes
DC LEVELS						
Supply voltage	3	4.5	5.0	5.5	Volts	
Current & RF POWER						
433.92 MHz						
Supply current @ V_{CC} = 5V	3			12	mA	1
RF power	2		9	+12	dBm	1
RF & Data						
2nd harmonic			-50		dBc	1
Harmonics @ > 1GHz			-46		dBc	1
Initial frequency accuracy			±50		KHz	
Overall frequency accuracy			±75		KHz	
Modulation bandwidth @ -3dB			10		KHz	
Modulation distortion (THD)					%	
Power up time to full RF			10		µs	
Data rate				50000	bits/s	
Data pulse width		40			µs	

Note 1: measured into a 50Ω impedance

Absolute Maximum Ratings: Receiver QFMR5

Operating temperature:	-10°C to +55°C
Storage temperature:	-40°C to +100°C
Supply Voltage (pin 5)	7V
RF Input (pin 1)	+20dBm

Electrical Characteristics: Receiver R5

	Pin	min.	typ.	Max.	units	notes
DC LEVELS						
Supply voltage	5	4.5	5.0	5.5	Volts	
Supply current			4.8		mA	
Supply ripple		-	-	10	mV_{p-p}	
Data output high		4.0			V	
Data output low				0.5	V	
RF						
RF sensitivity			-107		dBm	
IF Bandwidth			230		KHz	
Initial signal accuracy			±22		KHz	
Max. RF input			20		dBm	
E.M.C						
Spurious responses upto 1GHz			<60		dB	
LO leakage, conducted			<60		dBm	
LO leakage, radiated			<60		dBm	
Dynamic Timings						
Power up to stable data *(With RF signal present)*			tba		mS	
Signal to stable data *(With power suplly already on)*			tba		mS	
Power up to valid RSSI *(With RF signal present)*			tba		mS	
Mark : space ratio			50		%	
Bit rate		100		50000	bps	

Antenna Design

The design and positioning of the antenna is as crucial as the module performance itself in achieving a good wireless system range. The following will assist the designer in maximising system performance.

The antenna should be kept as far away from sources of electrical interference as physically possible. If necessary, additional power line decoupling capacitors should be placed close to the module.

The antenna 'hot end' should be kept clear of any objects, especially any metal as this can severely restrict the efficiency of the antenna to receive power. Any earth planes restricting the radiation path to the antenna will also have the same effect.

Best range is achieved with either a straight piece of wire, rod or PCB track @ ¼ wavelength (15.5cm @ 433.92MHz). Further range may be achieved if the ¼ wave antenna is placed perpendicular in the middle of a solid earth plane measuring at least 16cm radius. In this case, the antenna should be connected to the module via some 50 ohm characteristic impedance coax

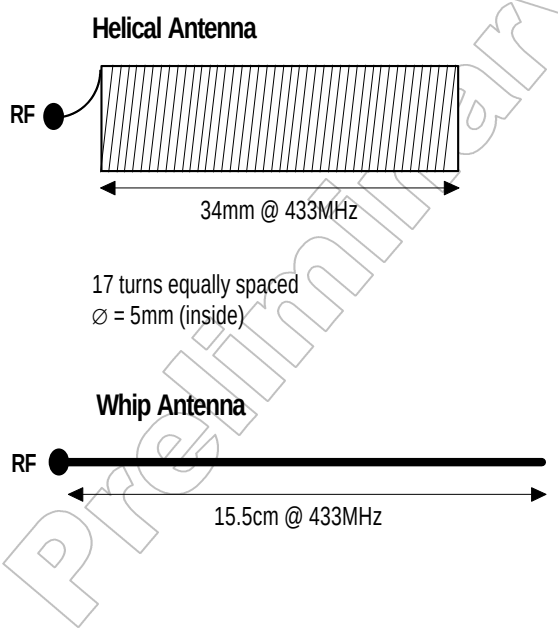

Figure 3: Antenna Configurations To Be Used With The QFMT5 & QFMR5 Modules

Application Circuit

The application circuits show how the QFMT5 transmitter and the QFMR5 receiver can easily be integrated into a system to form a wireless link.

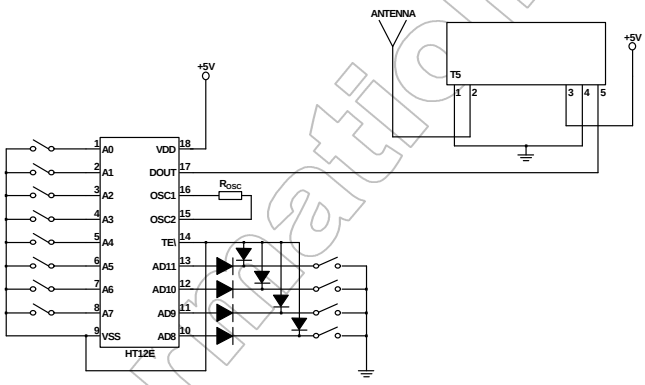

Figure 4: QFMT5 Transmitter Application Circuit

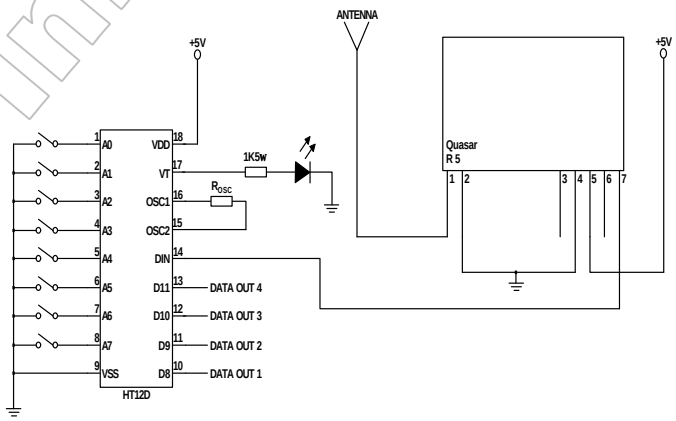

Figure 5: QFMR5 Receiver Application Circuit

RSSI Values:

The QFMR5 RSSI output provides a DC output proportional to the RF input signal. The table below shows the typical RSSI value depending on the Rf signal strength.

RF Signal Strength / dBm	RSSI / V
-110	tba
-100	
-90	
-80	
-70	
-60	
-50	
-40	
-30	
-20	

Mechanical Dimensions

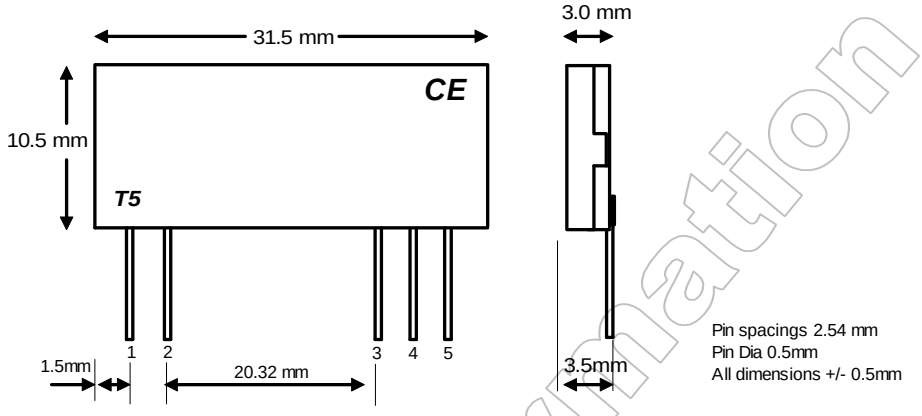

Figure 6: Transmitter

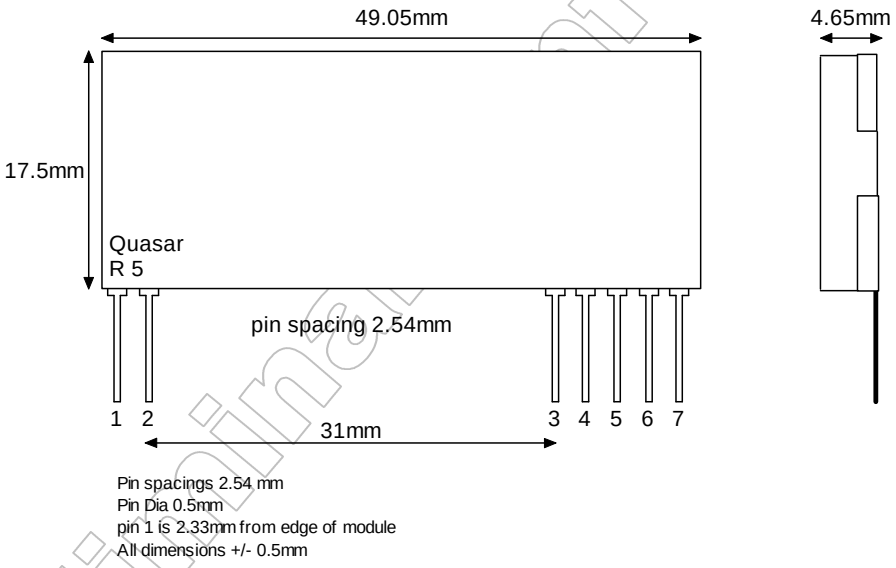

Figure 7: Receiver

Should you require further assistance please contact :

R F Solutions Ltd.,
Unit 21, Cliffe Industrial Estate,
South Street, Lewes,
E. Sussex. BN8 6JL, England

Tel: +44 (0)1273 898 000 **Fax: +44 (0)1273 480 661**

Email : sales@rfsolutions.co.uk **http://www.rfsolutions.co.uk**