ENCLOSURES & ASSEMBLY SERVICES
WWW.BOXENCLOSURES.COM

BOX ENCLOSURES-USA
28915 N. Herky Dr #107
LAKE BLUFF, IL 60044
TEL: 847-932-4700
FAX: 847-932-4701
E-Mail - sales@boxenclosures.com

BOX ENCLOSURES-UK
I Ash Grove
Keighley England B020705
TEL: +44 (0) 1535 636 856
FAX: +44 (0) 1535 637 737

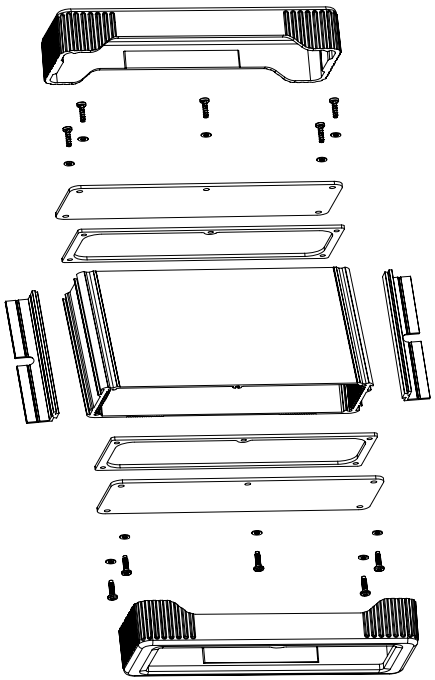

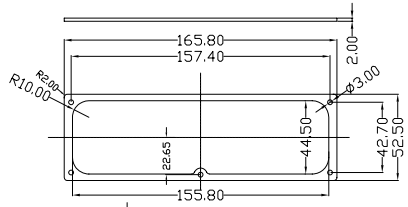

SK-4 SEALING KIT
OPTIONAL ACCESSORY

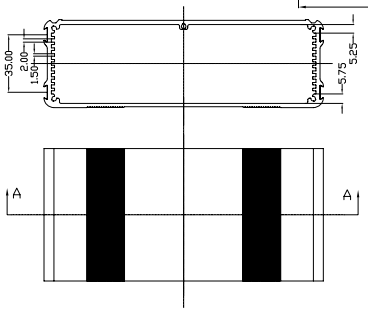

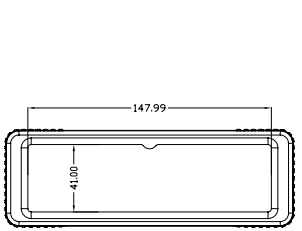

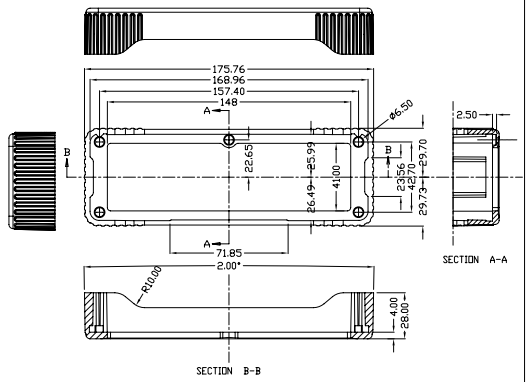

EC4_END_CAP_OPTIONAL_ACCESSORY

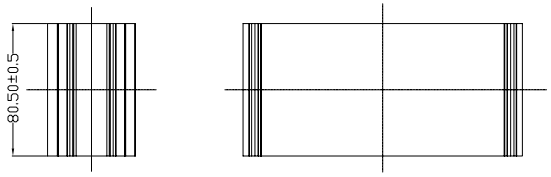

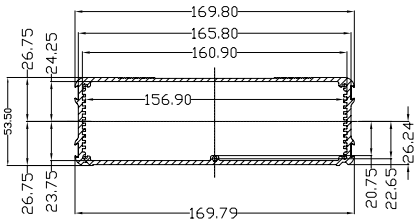

SECTION A-A

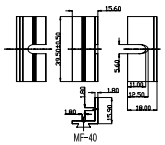

MF-40
OPTIONAL ACCESSORY

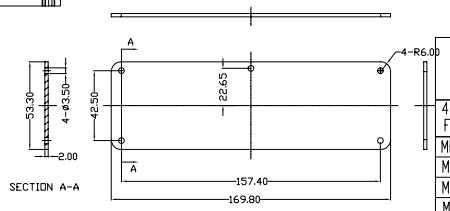

END PLATE

Mounting Flanges Optional Accessory (Sold individually)	
40 mm Mounting Flange Part #	Color
MF40-BK	Black
MF40-BL	Blue
MF40-GD	Gold
MF40-GR	Green
MF40-RD	Red
MF40-SI	Silver
80 mm Mounting Flange Part #	Color
MF80-BK	Black
MF80-BL	Blue
MF80-GD	Gold
MF80-GR	Green
MF80-RD	Red
MF80-SI	Silver

COLOR LEGEND	
Part #	Anodized Color
B4-080 BK	Black
B4-080 BL	Blue
B4-080 GD	Gold
B4-080 GR	Green
B4-080 RD	Red
B4-080 SI	Silver

Optional End Caps (sold in pairs)	
Part #	Color
EC-4BK	Black
EC-4BL	Blue
EC-4GN	Green
EC-4RD	Red
EC-4GY	Gray

Sealing Kit - Optional Accessory	
Part #	Description
SK-4	NEM 4/IP65 Sealing kit for ALL B-4 Series Enclosures

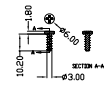

PHILIPS HEAD SCREW

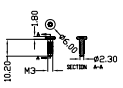

TORX HEAD SCREW

SEALING WASHERS

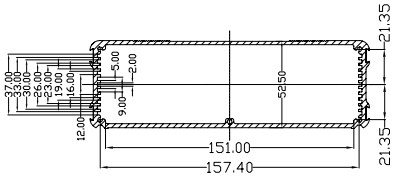

SECTION A-A

ENCLOSURE PROFILE

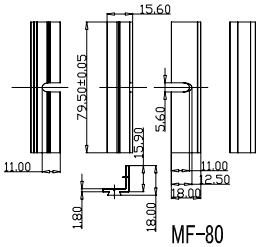

MF-80
OPTIONAL ACCESSORY

ENCLOSURES & ASSEMBLY SERVICES

Title	Revision:
B4-080 MASTER DRAWING	

Material:	TOLERANCE	Drn. Date
Aluminum 6063-T6(HE9)	all dimension in mm unless otherwise specified.	PAN 2009-04-08
Finish: Anodized BS 1615	x ±0.40 .x ±0.20 .xx ±0.10 ANGLE ±1°	Chk. Date
Proj.		App. Date

THIS DRAWING IS THE PROPERTY OF AND MAY EMBODY PROPRIETARY INFORMATION OWNED BY Box Enclosures . IT IS PROVIDED UNDER A CONFIDENTIAL RELATIONSHIP FOR A SPECIFIC PURPOSE. THE RECIPIENT AGREES TO USE IT ONLY FOR SUCH PURPOSE AND RETURN IT TO Box Enclosure UPON REQUEST.

Downloaded from Elcodis.com electronic components distributor