SPC TECHNOLOGY

ALL RIGHTS RESERVED. NO PORTION OF THIS PUBLICATION, WHETHER IN WHOLE OR IN PART CAN BE REPRODUCED WITHOUT THE EXPRESS WRITTEN CONSENT OF SPC TECHNOLOGY.

SPC–F005.DWG

REVISIONS

DOC. NO. SPC–F005 * Effective: 7/8/02 * DCP No: 1398

DCP #	REV	DESCRIPTION	DRAWN	DATE	CHECKD	DATE	APPRVD	DATE
			VEE	03–08–10	JAG	04–08–10	XXX	17–08–10

RoHS Compliant

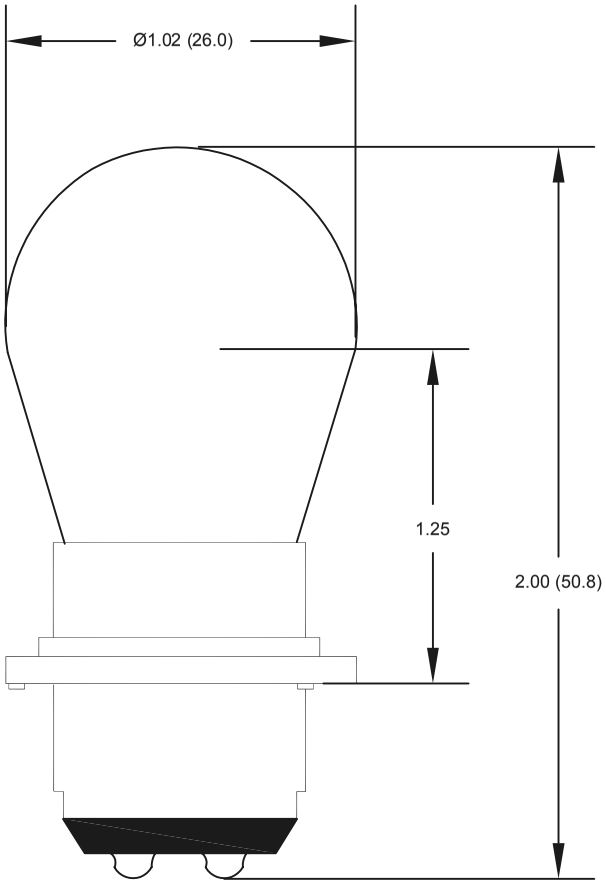

Dimensions : Inches (mm)

Specifications:

1. Design Volts : 6.5
2. Design Amps : 2.75
3. Filament Shape : C-6
4. Average Life : 100 hours
5. M.S.C.P. : 23.00
6. Watts : 17.9
7. Silver Contacts

Part Number Table

Description	Part Number
S-8 Double Contact, Prefocus Lamp	1460X

DISCLAIMER:
ALL STATEMENTS AND TECHNICAL INFORMATION CONTAINED HEREIN ARE BASED UPON INFORMATION AND/OR TESTS WE BELIEVE TO BE ACCURATE AND RELIABLE. SINCE CONDITIONS OF USE ARE BEYOND OUR CONTROL, THE USER SHALL DETERMINE THE SUITABILITY OF THE PRODUCT FOR THE INTENDED USE AND ASSUME ALL RISK AND LIABILITY WHATSOEVER IN CONNECTION THEREWITH.

TOLERANCES:
UNLESS OTHERWISE SPECIFIED, DIMENSIONS ARE FOR REFERENCE PURPOSES ONLY.

DRAWN BY:	DATE:
VEE	03–08–10
CHECKED BY:	DATE:
JAG	04–08–10
APPROVED BY:	DATE:
XXX	17–08–10

DRAWING TITLE: S–8 Double Contact, Prefocus Lamp

SIZE	DWG. NO.	ELECTRONIC FILE	REV
XXX	XXX	92N4820	A

SCALE: NTS U.O.M.: INCHES [mm] SHEET: 1 OF 1

Downloaded from Elcodis.com electronic components distributor