Digital Soft Starter Auxiliary Fan Attachment
45mm & 55mm wide

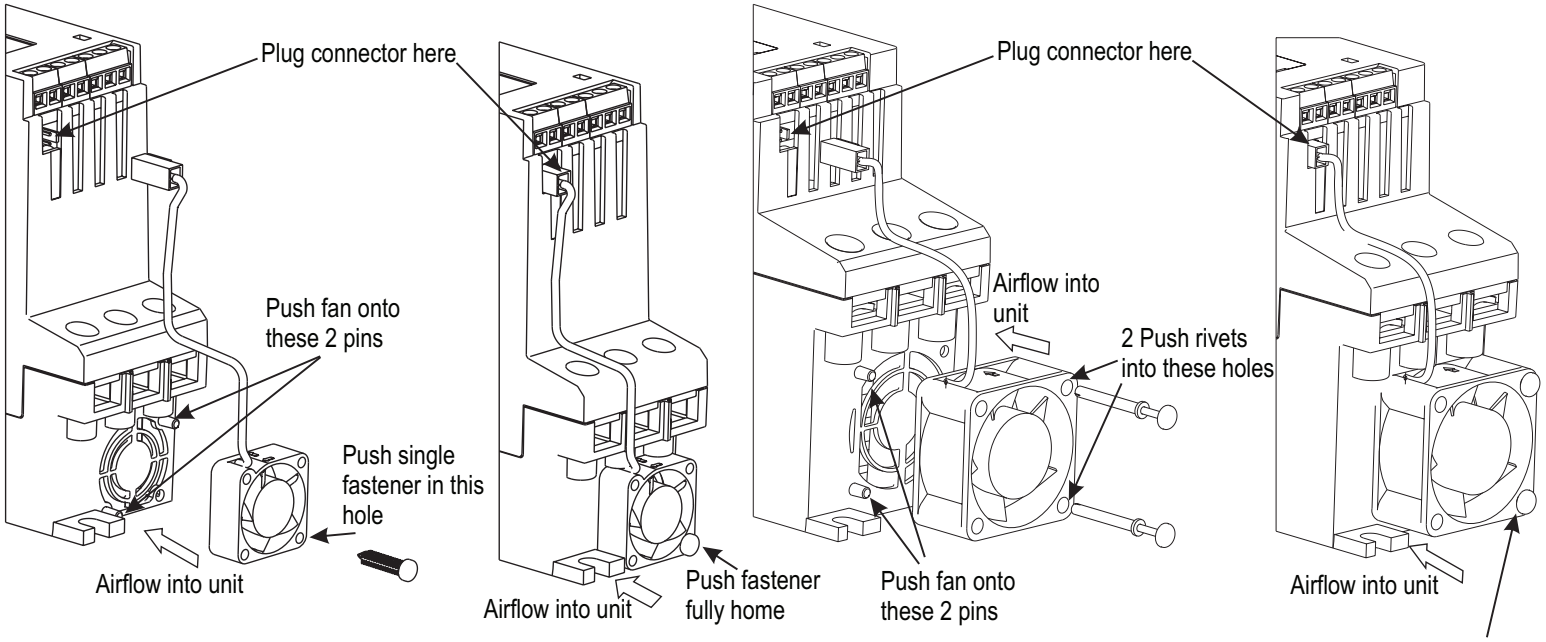

45mm unit has 2 locating pins
and only 1 "Barbed" push fit fastener

55mm has 2 locating pins
and 2 push rivets

Unit width	Fan Kit part No.	Fan Size	Fan volts
45mm	PFEFAN01	25mm x 25mm	12V
55mm	PFEFAN02	40mm x 40mm	24V

M-7G71
090625 EC4490

Downloaded from Elcodis.com electronic components distributor