RE-max 13 ∅13 mm, Precious Metal Brushes CLL, 1.2 Watt

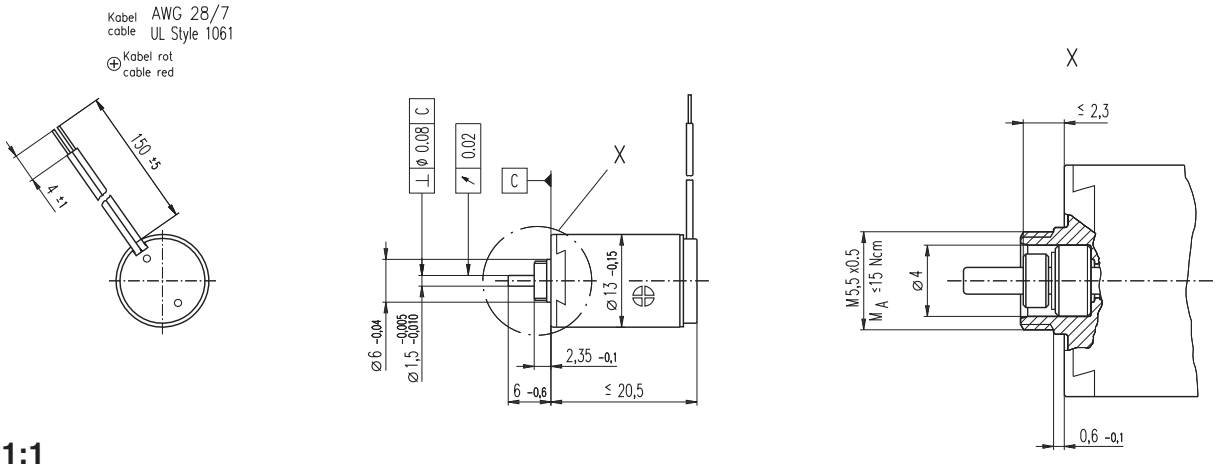

M 1:1

Stock program
Standard program
Special program (on request)

Order Number

			201352	203881	203882	203883	203884	203885	203886	203887	203888	203889	203890	203891	203892	203893	203894
Motor Data																	
	Values at nominal voltage																
1	Nominal voltage	V	1.0	1.2	1.5	1.8	2.4	3.0	3.6	4.2	5.0	6.0	8.0	9.0	10.0	12.0	15.0
2	No load speed	rpm	11600	11400	11200	11100	11400	11700	12200	11600	11400	11100	11800	10700	11200	11400	10800
3	No load current	mA	67.8	54.9	42.8	35.0	27.5	22.7	20.2	16.1	13.1	10.4	8.69	6.65	6.35	5.43	4.01
4	Nominal speed	rpm	10000	9200	8630	7920	7390	7010	7190	6400	6120	5780	6540	5360	5750	5970	5350
5	Nominal torque (max. continuous torque)	mNm	0.335	0.422	0.552	0.682	0.897	1.11	1.28	1.33	1.31	1.32	1.31	1.30	1.28	1.29	1.28
6	Nominal current (max. continuous current)	A	0.480	0.480	0.480	0.480	0.480	0.480	0.480	0.404	0.330	0.267	0.213	0.170	0.158	0.135	0.102
7	Stall torque	mNm	2.42	2.21	2.41	2.41	2.56	2.81	3.14	2.98	2.85	2.78	2.94	2.61	2.67	2.75	2.57
8	Starting current	A	3.02	2.25	1.94	1.59	1.31	1.17	1.14	0.879	0.695	0.548	0.465	0.333	0.318	0.278	0.198
9	Max. efficiency	%	73	72	73	73	74	75	76	75	75	75	75	74	74	75	74
	Characteristics																
10	Terminal resistance	Ω	0.331	0.533	0.775	1.13	1.84	2.57	3.17	4.78	7.20	11.0	17.2	27.0	31.4	43.2	75.8
11	Terminal inductance	mH	0.0056	0.0083	0.0135	0.0199	0.0333	0.0501	0.0661	0.0993	0.145	0.223	0.346	0.532	0.607	0.847	1.47
12	Torque constant	mNm / A	0.802	0.980	1.25	1.51	1.96	2.41	2.76	3.39	4.10	5.08	6.33	7.84	8.38	9.89	13.0
13	Speed constant	rpm / V	11900	9740	7650	6300	4870	3970	3460	2820	2330	1880	1510	1220	1140	965	734
14	Speed / torque gradient	rpm / mNm	4920	5300	4760	4710	4570	4240	3960	3980	4090	4050	4100	4190	4280	4220	4280
15	Mechanical time constant	ms	18.4	16.1	14.8	14.2	13.7	13.4	13.1	13.1	13.1	13.0	13.0	13.1	13.1	13.0	13.1
16	Rotor inertia	gcm²	0.356	0.290	0.298	0.288	0.287	0.301	0.317	0.313	0.305	0.306	0.303	0.298	0.292	0.295	0.292

Specifications

	Thermal data	
17	Thermal resistance housing-ambient	47.5 K / W
18	Thermal resistance winding-housing	14 K / W
19	Thermal time constant winding	5.08 s
20	Thermal time constant motor	356 s
21	Ambient temperature	-20 ... +65°C
22	Max. permissible winding temperature	+85°C
	Mechanical data (sleeve bearings)	
23	Max. permissible speed	19000 rpm
24	Axial play	0.05 - 0.15 mm
25	Radial play	0.014 mm
26	Max. axial load (dynamic)	0.8 N
27	Max. force for press fits (static)	35 N
28	Max. radial loading, 5 mm from flange	1.4 N
	Other specifications	
29	Number of pole pairs	1
30	Number of commutator segments	7
31	Weight of motor	15 g

CLL = Capacitor Long Life
Alignment of the electronic connections not specified.

Values listed in the table are nominal.
Explanation of the figures on page 49.

Operating Range

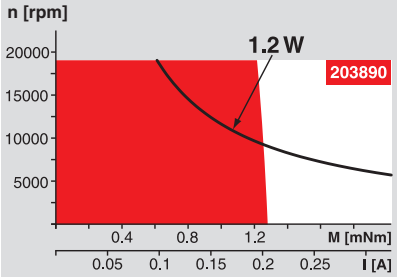

Comments

Continuous operation
In observation of above listed thermal resistance (lines 17 and 18) the maximum permissible winding temperature will be reached during continuous operation at 25°C ambient.
= Thermal limit.

Short term operation
The motor may be briefly overloaded (recurring).

Assigned power rating

maxon Modular System

Overview on page 16 - 21

Planetary Gearhead
∅13 mm
0.05 - 0.15 Nm
Page 210

Planetary Gearhead
∅13 mm
0.2 - 0.35 Nm
Page 211

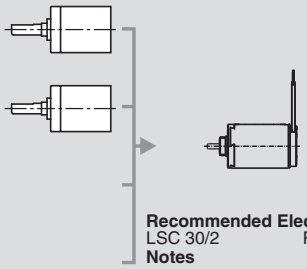

Recommended Electronics:
LSC 30/2 Page 282
Notes **18**

Downloaded from Elcodis.com electronic components distributor