maxon motor
driven by precision

Please find our works drawings for the parts supplied to Farnell. The parts are modified motors from the base motors (i.e. reduced shaft ready for use with the Gearheads or back shaft reduced ready for the encoder)

I have enclosed the Maxon base part number and the catalogue PDF that gives the electrical specifications

121391 MOTOR, 26MMDIA, 12VDC, 11W – Farnell Order Code 176-1305.
Maxon base part no 110937

121394 MOTOR, 26MMDIA, 24VDC, 11W – Farnell Order Code 176-1306.
Maxon base part no 110940

243066 MOTOR, 32MMDIA, 12VDC, 15W, THRO S – Farnell Order Code1761307
Maxon base part no 236653

240987 MOTOR, 32MMDIA, 24VDC, 15W, THRO S – Farnell Order Code1761308
Maxon base part no 236655

137576 MOTOR, 36MMDIA, 24VDC, 70W – Farnell Order Code 1761309
Maxon base no 118798

Maxon motor UK Ltd
Maxon House, Hogwood Lane, Finchampstead, Berkshire, RG40 4QW
Tel: +44 (0) 118 9733337 Fax: +44 (0) 118 9737472

Downloaded from Elcodis.com electronic components distributor

# RE 36 ∅36 mm, Graphite Brushes, 70 Watt

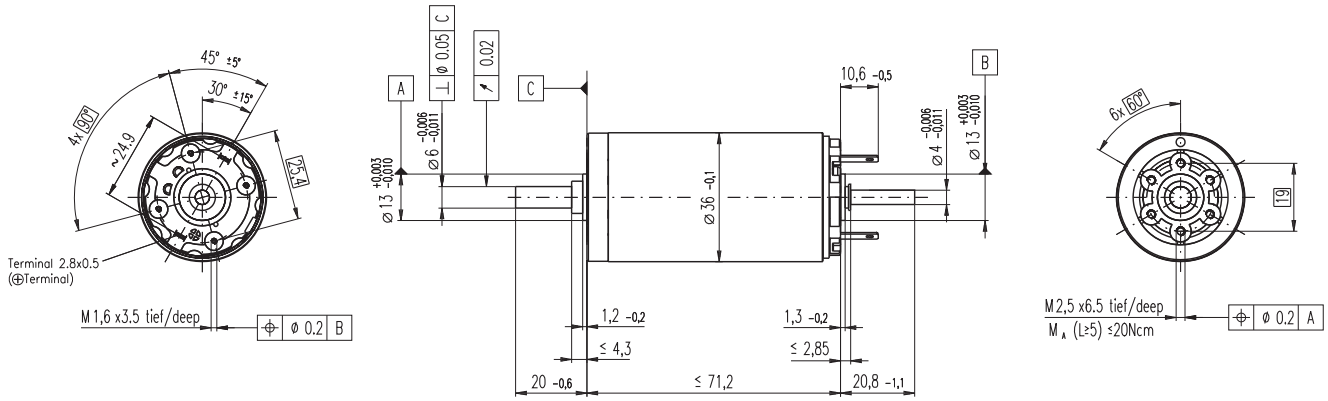


**M 1:2**

Stock program
Standard program
Special program (on request)

| | | | Order Number | | | | | | | | | | | | | |
|---|---|---|---|---|---|---|---|---|---|---|---|---|---|---|---|---|
| | | | 118797 | 118798 | 118799 | 118800 | 118801 | 118802 | 118803 | 118804 | 118805 | 118806 | 118807 | 118808 | 118809 | 118810 |
| **Motor Data** | | | | | | | | | | | | | | | | |
| | **Values at nominal voltage** | | | | | | | | | | | | | | | |
| 1 | Nominal voltage | V | 18.0 | 24.0 | 32.0 | 42.0 | 42.0 | 48.0 | 48.0 | 48.0 | 48.0 | 48.0 | 48.0 | 48.0 | 48.0 | 48.0 |
| 2 | No load speed | rpm | 6610 | 6210 | 6790 | 7020 | 6340 | 6420 | 5220 | 4320 | 3450 | 2830 | 2280 | 1780 | 1420 | 1180 |
| 3 | No load current | mA | 153 | 105 | 88.6 | 70.4 | 61.4 | 54.6 | 41.6 | 32.6 | 24.7 | 19.5 | 15.2 | 11.5 | 8.97 | 7.31 |
| 4 | Nominal speed | rpm | 5880 | 5530 | 6120 | 6350 | 5660 | 5740 | 4520 | 3600 | 2720 | 2090 | 1530 | 1010 | 651 | 390 |
| 5 | Nominal torque (max. continuous torque) | mNm | 70.2 | 78.2 | 77.1 | 77.9 | 79.9 | 79.5 | 81.5 | 82.2 | 83.6 | 84.1 | 84.1 | 83.8 | 84.1 | 83.1 |
| 6 | Nominal current (max. continuous current) | A | 2.90 | 2.25 | 1.82 | 1.45 | 1.33 | 1.18 | 0.978 | 0.813 | 0.660 | 0.545 | 0.439 | 0.343 | 0.275 | 0.226 |
| 7 | Stall torque | mNm | 730 | 783 | 832 | 866 | 786 | 785 | 627 | 504 | 403 | 326 | 258 | 198 | 158 | 127 |
| 8 | Starting current | A | 28.6 | 21.5 | 18.7 | 15.3 | 12.6 | 11.1 | 7.22 | 4.80 | 3.06 | 2.04 | 1.30 | 0.784 | 0.501 | 0.334 |
| 9 | Max. efficiency | % | 84 | 85 | 86 | 86 | 86 | 86 | 85 | 84 | 82 | 81 | 79 | 77 | 75 | 72 |
| | **Characteristics** | | | | | | | | | | | | | | | |
| 10 | Terminal resistance | Ω | 0.628 | 1.11 | 1.71 | 2.74 | 3.35 | 4.32 | 6.65 | 10.0 | 15.7 | 23.5 | 36.8 | 61.3 | 95.8 | 144 |
| 11 | Terminal inductance | mH | 0.0988 | 0.201 | 0.300 | 0.487 | 0.597 | 0.760 | 1.15 | 1.68 | 2.62 | 3.87 | 5.96 | 9.70 | 15.1 | 21.9 |
| 12 | Torque constant | mNm / A | 25.5 | 36.4 | 44.5 | 56.6 | 62.6 | 70.7 | 86.9 | 105 | 131 | 160 | 198 | 253 | 315 | 380 |
| 13 | Speed constant | rpm / V | 375 | 263 | 215 | 169 | 152 | 135 | 110 | 90.9 | 72.7 | 59.8 | 48.2 | 37.8 | 30.3 | 25.1 |
| 14 | Speed / torque gradient | rpm / mNm | 9.23 | 8.05 | 8.27 | 8.18 | 8.14 | 8.25 | 8.41 | 8.65 | 8.67 | 8.80 | 8.96 | 9.17 | 9.21 | 9.51 |
| 15 | Mechanical time constant | ms | 6.00 | 5.89 | 5.84 | 5.81 | 5.81 | 5.80 | 5.81 | 5.81 | 5.82 | 5.83 | 5.84 | 5.86 | 5.85 | 5.88 |
| 16 | Rotor inertia | gcm² | 62.0 | 69.9 | 67.5 | 67.8 | 68.1 | 67.2 | 66.0 | 64.2 | 64.1 | 63.3 | 62.2 | 61.1 | 60.7 | 59.0 |

## Specifications

| | | |
|---|---|---|
| | **Thermal data** | |
| 17 | Thermal resistance housing-ambient | 6.4 K / W |
| 18 | Thermal resistance winding-housing | 3.4 K / W |
| 19 | Thermal time constant winding | 44.2 s |
| 20 | Thermal time constant motor | 1120 s |
| 21 | Ambient temperature | -30 ... +100°C |
| 22 | Max. permissible winding temperature | +125°C |
| | **Mechanical data (ball bearings)** | |
| 23 | Max. permissible speed | 12000 rpm |
| 24 | Axial play | 0.05 - 0.15 mm |
| 25 | Radial play | 0.025 mm |
| 26 | Max. axial load (dynamic) | 5.6 N |
| 27 | Max. force for press fits (static) | 5.6 N |
| | (static, shaft supported) | 1200 N |
| 28 | Max. radial loading, 5 mm from flange | 28 N |
| | **Other specifications** | |
| 29 | Number of pole pairs | 1 |
| 30 | Number of commutator segments | 13 |
| 31 | Weight of motor | 350 g |

Values listed in the table are nominal.
Explanation of the figures on page 49.

⚠ Tolerances may vary from the standard specification.

**Option**
Preloaded ball bearings

## Operating Range

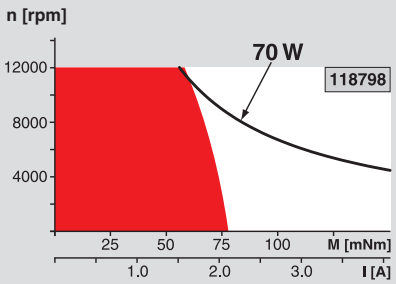


## Comments

**Continuous operation**
In observation of above listed thermal resistance (lines 17 and 18) the maximum permissible winding temperature will be reached during continuous operation at 25°C ambient.
= Thermal limit.

**Short term operation**
The motor may be briefly overloaded (recurring).

**Assigned power rating**

## maxon Modular System

Overview on page 16 - 21

**Planetary Gearhead**
∅32 mm
0.4 - 2.0 Nm
Page 345

**Planetary Gearhead**
∅32 mm
0.75 - 4.5 Nm
Page 234

**Planetary Gearhead**
∅32 mm
1.0 - 6.0 Nm
Page 235

**Planetary Gearhead**
∅42 mm
3 - 15 Nm
Page 240

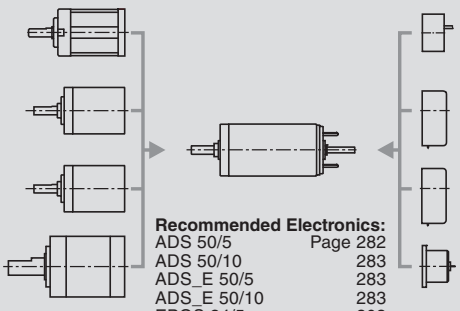

**Recommended Electronics:**

| | |
|---|---|
| ADS 50/5 | Page 282 |
| ADS 50/10 | 283 |
| ADS_E 50/5 | 283 |
| ADS_E 50/10 | 283 |
| EPOS 24/5 | 303 |
| EPOS2 50/5 | 303 |
| EPOS P 24/5 | 306 |
| **Notes** | **18** |

**Encoder MR**
256 - 1024 CPT,
3 channels
Page 265

**Encoder HEDS 5540**
500 CPT,
3 channels
Page 268

**Encoder HEDL 5540**
500 CPT,
3 channels
Page 270

**DC-Tacho DCT**
∅22 mm
0.52 V
Page 277





Downloaded from Elcodis.com electronic components distributor

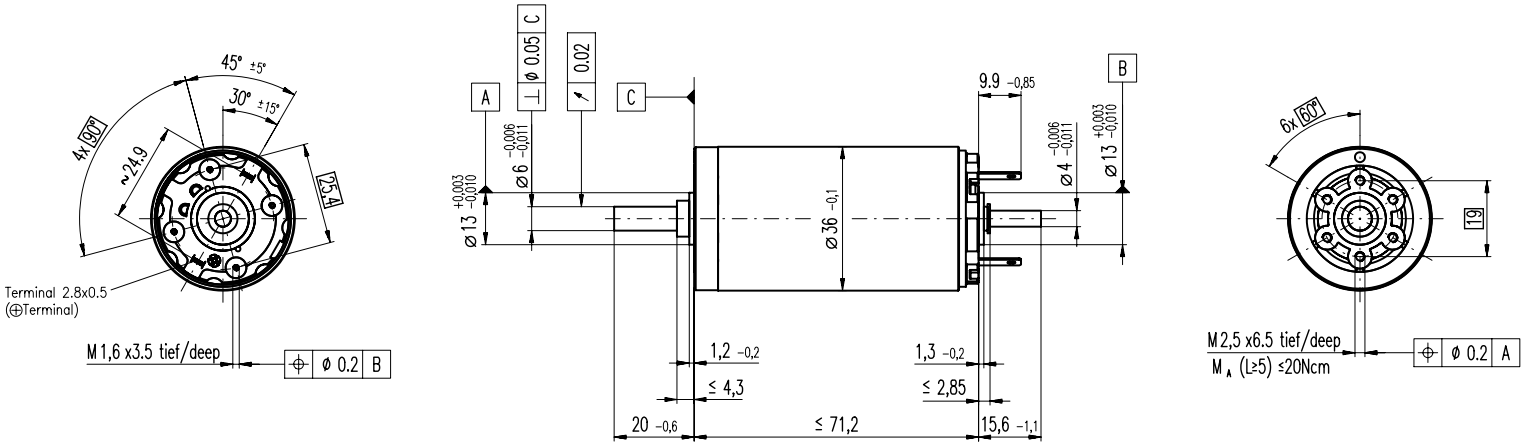


Axialspiel
axial play 0.05 ... 0.15

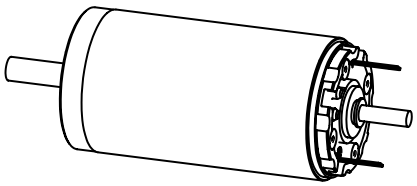

| | | | |
|---|---|---|---|
| | maxon DC motor RE36 GB 70W KL 2WE | | |
| Artikelnummer | Fertigprodukt | | Basisnummer |
| Artikel–Nr. / part no | Index/rev. | AFD–Nr/change 625755 16.10.2009 BD | Werkstoff / material |
| | | | Massstab scale A3 1:1 |

Änderungen in der Herstelltechnologie, Geometrie und Material nur in Absprache mit maxon motor ag Sachseln

Modification in production technology geometry and materials only by agreement with maxon motor ag Sachseln

Masse ohne Toleranzangabe:
dimensions without tolerance:

Für diese Zeichnung behalten wir uns alle Rechte vor.
We reserve all rights for this drawing.

| | Datum/date | Name |
|---|---|---|
| Gezeichnet | 03.04.2002 | LAP |
| Gepräft | 16.10.2009 | |
| EDV | 8:00185756.SZN | |
| Freigabe: | 555385 | |

**maxon motor ag**
CH–6072 Sachseln

Benennung / title
**Massbild**
RE36 GB

| Dokument–Nr. / dwg no | Index/rev. | Blatt/sheet |
|---|---|---|
| 554917 | 03 | 1 / 1 |

Ers.f. RE036–072–00EAC200A
Ers.d.

Downloaded from Elcodis.com electronic components distributor