MICRO SWITCH
FREEPORT ILLINOIS, U.S.A
A DIVISION OF HONEYWELL
FED. MFG. CODE 91929

MINIATURE PRECISION LIMIT SWITCH

CATALOG LIST
924CE2-T3

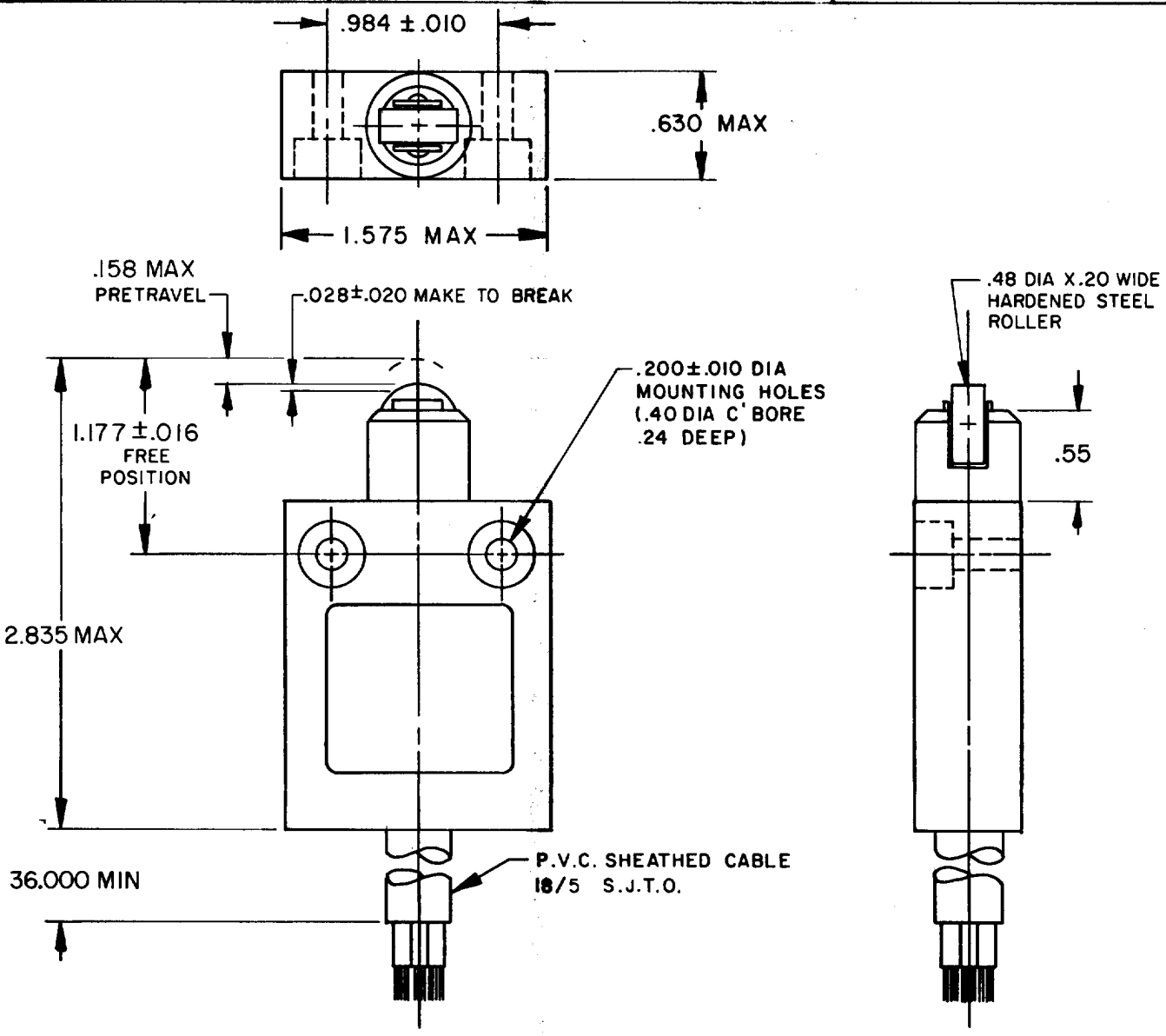

NOTES
1 - ZINC HOUSING FINISHED WITH GRAY PAINT
2 - MAKE BEFORE BREAK CIRCUITRY

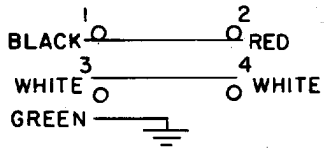

CIRCUIT DIAGRAM

THIS DRAWING COVERS A PROPRIETARY ITEM AND IS THE PROPERTY OF MICRO SWITCH, A DIVISION OF HONEYWELL. THIS DRAWING IS NOT TO BE COPIED OR USED WITHOUT THE APPROVAL OF MICRO SWITCH.

THIRD ANGLE PROJECTION

CHARACTERISTICS

OPERATING FORCE - - - - - 5.1 LB MAX

OVERTRAVEL - - - - - - - - - - - .020 MIN

ELECTRICAL DATA

CONTACT ARRANGEMENT
S P D T D B

10A - 250 VAC
1/3HP - 125 OR 250 VAC

SCALE FULL

DO NOT SCALE PRINT

TOLERANCES
APPLY TO DESIGN UNITS. CONVERSIONS ARE ONLY FOR REFERENCE. UNLESS NOTED, TOLERANCES ARE ±

	DIM. mm	TOL. mm/in	DIM. in	TOL. mm/in
NO PLACES	X	1/.04		
ONE PLACE	X.X	0.4/.016	X.X	0.8/.03
TWO PLACES	X.XX	0.15/.006	X.XX	0.38/.015
THREE PLACES			X.XXX	0.13/.005
ANGLES				

DESIGN UNITS SI METRIC ☐ US CUSTOMARY ■

WEIGHT

DRAWN	TSK	20 OCT 86	
CHECK			
CHECK			
CHECK			
CHECK			
CHECK			

FO-52848-A

924CE2-T3

M

DRAWING NUMBER

X 2

ISSUE

RELEASE NO. PR 14729

REPLACES

REVISIONS

A	C069061	
15	LJF AUG 91	

Downloaded from Elcodis.com electronic components distributor