MICRO SWITCH
A DIVISION OF MINNEAPOLIS-HONEYWELL REGULATOR COMPANY
FREEPORT, ILLINOIS
FED. MFR. CODE 91929

SWITCH—ENCLOSED

CATALOG LISTING
EX-AR20

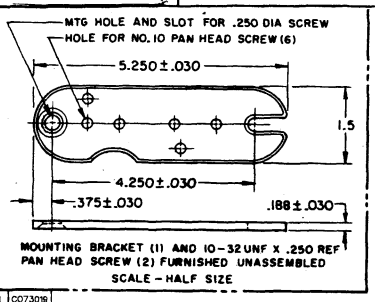

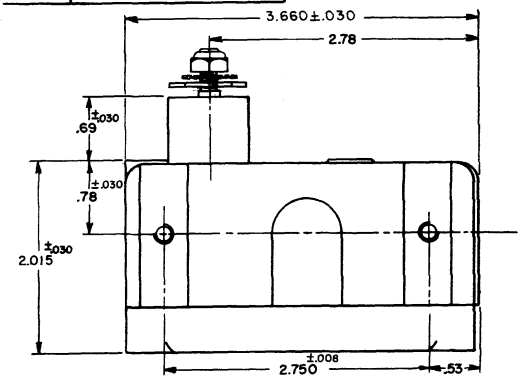

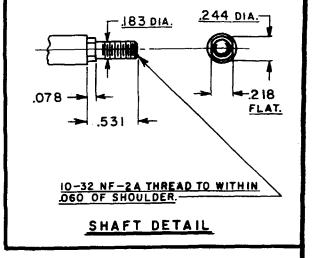

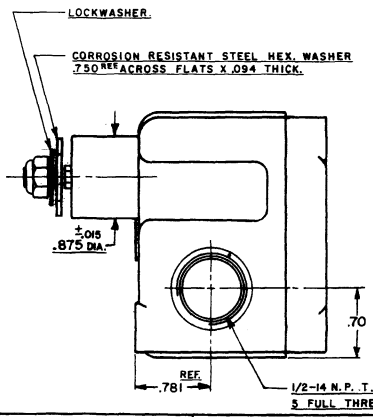

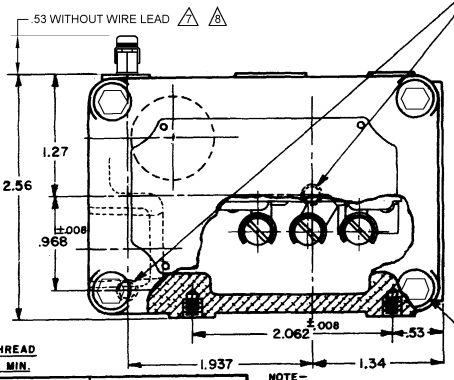

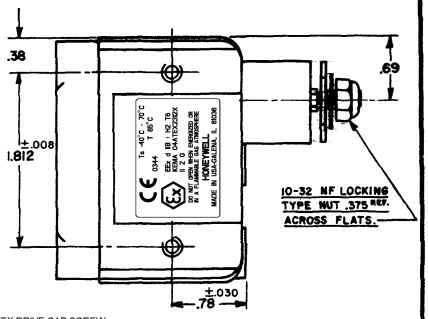

CHARACTERISTICS	ELECTRICAL DATA
OPERATING TORQUE — — —12.5 OZ. IN. MIN.	CONTACT ARRANGEMENT S.P.D.T.
OPERATING TORQUE — — 31.25 OZ. IN. MAX.	
RELEASE TORQUE — — — 6.25 OZ. IN. MIN.	-L96- 15 A-125, 250, OR 480 VAC
PRETRAVEL — — — — — 8° — .219 MAX.	1/2 A-125 VDC; 1/4 A-250 VDC
DIFFERENTIAL TRAVEL — — 1/4° — .007 MAX.	1/8 HP-125 VAC; 1/4 HP-250 VAC
OVERTRAVEL — — — — DO NOT OVERTRAVEL MORE THAN 90°	
SWITCH — BASIC REPLACEMENT — BZ-2R-P4	

SCALE — FULL
DO NOT SCALE PRINT
UNLESS OTHERWISE SPECIFIED
DIMENSIONS ARE IN INCHES

TOLERANCES ARE:

ONE PLACE	(.0)	±.030
TWO PLACE	(.00)	±.015
THREE PLACE	(.000)	±.008
ANGLES		±2°

WEIGHT

NOTE-

1 -(8) MOUNTING SCREW HOLES, 10-32 NF-2B THREADS X .219 REF. DEEP.
2 -8-32 NC X .219 REF. TERMINAL SCREWS AND CUPWASHERS.
3 -EXPLOSION PROOF- UNDERWRITERS LAB. INC. LISTED FOR HAZARDOUS LOCATIONS NEMA 7, CLASS I, GROUPS C AND D, NEMA 9, CLASS II, GROUPS E, F AND G.
4 -SWITCH OPERATES ON RIGHT HAND CLOCKWISE ROTATION.
5 - EUROPEAN HAZARDOUS LOCATIONS DESIGNATION: EEx d IIB + H2 T6 CATAGORY II 2 G
6 - SEAL RATING: NEMA 1
7 EXTERNAL GROUND SCREW MAY BE ASSEMBLED TO ANY UNUSED MOUNTING SCREW HOLE
8 ASSEMBLE PROVIDED SPLIT LOCKWASHER BETWEEN GROUND LUG AND HOUSING

THIS DRAWING COVERS A PROPRIETARY ITEM AND IS THE PROPERTY OF MICRO SWITCH, A DIVISION OF HONEYWELL. THIS DRAWING IS NOT TO BE COPIED OR USED WITHOUT THE APPROVAL OF MICRO SWITCH

EX-AR20 (M) EX-AR20 ISSUE 8
REPLACES
RELEASE NO.
DRAWING NUMBER M
ISSUE 20 26APR05
AK

REVISIONS			
A	CO 6520	K.A.F. 4 FEB 57	7 FEB 57
B	CO 15608	M.B.F. 9 DEC 61	A.C.G.
C	CO 17653	H.S.W. 22 FEB 64	
D	CO 18276	M.B.F. 15 JUNE 64	CHECK
E	CO 19878	R.E.R. 27 OCT 66	
F	CO 26103	D.L.F. 18 JUL 68	12 FEB 37
G	CO 31559	B.L.H. 15 JUN 73	
H	CO 53388	B.L.H. 9 NOV 85	G.C.H.
J	CO 61381	D.A.W. 22 APR 87	CHECK
K	CO 70153	T.S.W. 10 OCT 91	

DRAWN K.A.F. 4 FEB 57 CHECK
74-843

Downloaded from Elcodis.com electronic components distributor