M LZA-LZY SERIES CHART 2

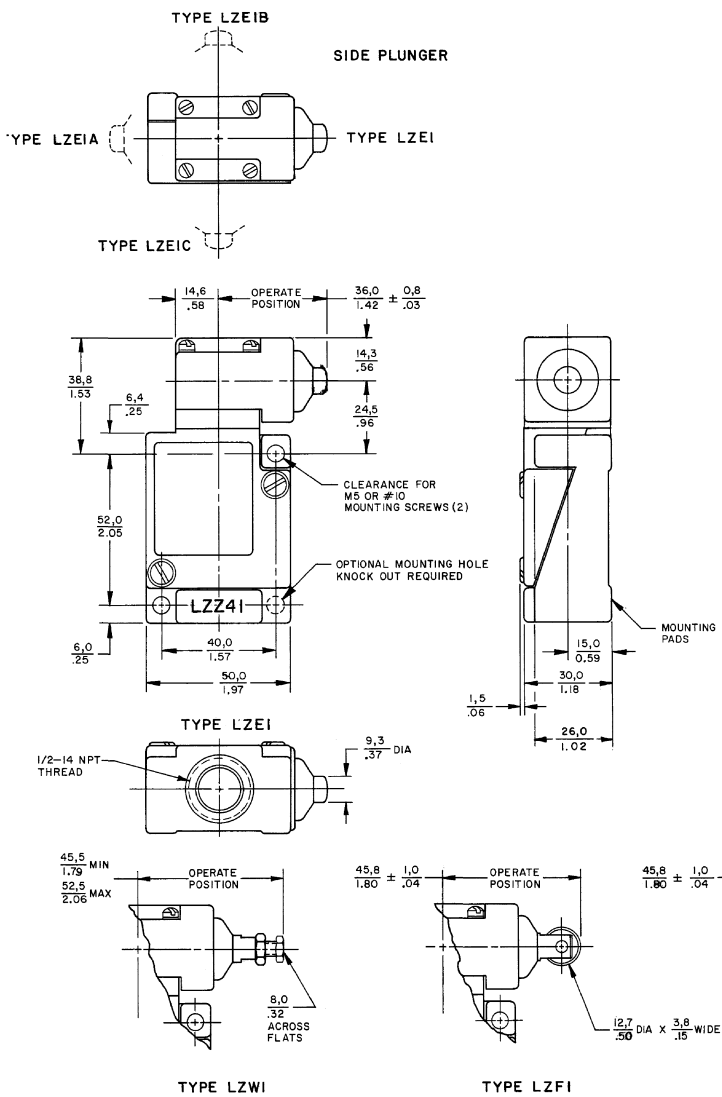

CHARACTERISTICS

OPERATE FORCE	13,5N / 48.6 OZ	MAX	8,0N / 28.8 OZ	TYP
PRETRAVEL	3,0 mm / .12 IN	MAX	2,0 mm / .08 IN	TYP
OVERTRAVEL	5,0 mm / .20 IN	MIN	5,5 mm / .22 IN	TYP
DIFFERENTIAL TRAVEL	0,13 mm / .005 IN	MAX	0,05-0,08 mm / .002-.003 IN	TYP
RELEASE TRAVEL	0,5 mm / .020 IN	MIN	1,9 mm / .075 IN	TYP

THIRD ANGLE PROJECTION

SCALE FULL

DO NOT SCALE PRINT

TOLERANCES

APPLY TO DESIGN LIMITS. CONVERSIONS ARE ONLY FOR REFERENCE, UNLESS NOTED. TOLERANCES ARE ±

	DIM. mm	TOL. mm/in	DIM. in	TOL. mm/in
NO PLACES	X	1/.04	X.X	0.4/.03
ONE PLACE	X.X	0.4/.016	X.XX	0.35/.015
TWO PLACES	X.XX	0.15/.005	X.XXX	0.13/.005
THREE PLACES				
ANGLES				

SI METRIC ☐ US CUSTOMARY ☒

DESIGN UNITS

WEIGHT

THIS DRAWING COVERS A PROPRIETARY ITEM AND IS THE PROPERTY OF MICRO SWITCH, A DIVISION OF HONEYWELL. THIS DRAWING IS NOT TO BE COPIED OR USED WITHOUT THE APPROVAL OF MICRO SWITCH.

MASTER REDUCED

MICRO SWITCH a Honeywell Division

FED. MFG. CODE 91929

SWITCH -ENCLOSED

CATALOG LISTING

LZA-LZY SERIES CHART 2

ISSUE 5 M CATALOG LISTING LZA-LYZ SERIES CHART 2 PAGE 1 OF 2 RELEASE NO. PR-8093 REPLACES

REVISIONS A CO-93789 6JW 31OCT98

FORMTEK DRAWN GJW 31OCT98 CHECK JAF 31OCT98 CHECK

Downloaded from Elcodis.com electronic components distributor

M LZA-LZY SERIES CHART 2

CHARACTERISTICS	ACTUATOR TYPES	
	7B	7M
OPERATING FORCE (MAXIMUM)	1.95N / 7 OZ	1.11N / 4 OZ
PRETRAVEL RADIUS (APPROXIMATE)	25,4 mm / 1 INCH	76,2 mm / 3 INCHES

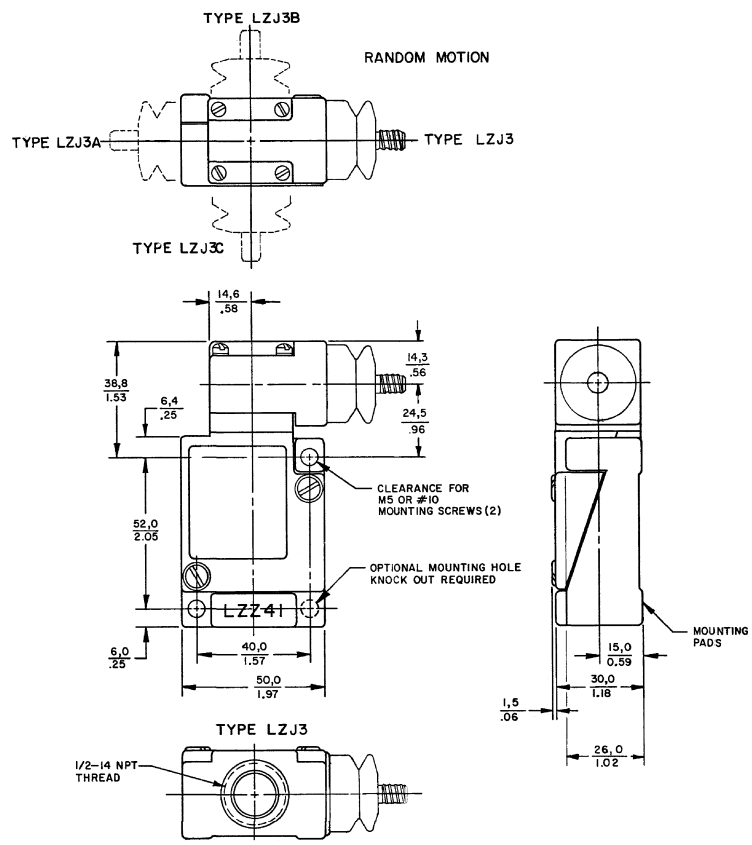

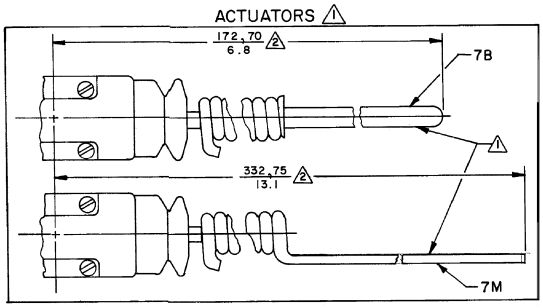

NOTES
1. ACTUATORS FURNISHED UNASSEMBLED
2. LENGTH FROM CENTERLINE OF SWITCH TO THE END OF THE ACTUATOR WHEN ACTUATOR IS ASSEMBLED TO SWITCH
3. LINEAR MEASURE mm/IN. OR mm/IN.

THIRD ANGLE PROJECTION

SCALE FULL

DO NOT SCALE PRINT

TOLERANCES
APPLY TO DESIGN UNITS. CONVERSIONS ARE ONLY FOR REFERENCE. UNLESS NOTED, TOLERANCES ARE ±

	DIM mm	TOL mm/in	DIM in	TOL mm/in
NO PLACES	X	1/.04	X.X	0.4/.03
ONE PLACE	X.X	0.4/.016	X.XX	0.15/.015
TWO PLACES	X.XX	0.15/.006	X.XXX	0.13/.005
THREE PLACES				
ANGLES				

DESIGN UNITS: SI METRIC ☐ US CUSTOMARY ☒

WEIGHT

THIS DRAWING COVERS A PROPRIETARY ITEM AND IS THE PROPERTY OF MICRO SWITCH, A DIVISION OF HONEYWELL. THIS DRAWING IS NOT TO BE COPIED OR USED WITHOUT THE APPROVAL OF MICRO SWITCH.

MASTER REDUCED

MICRO SWITCH a Honeywell Division
FED. MFG. CODE 91929

SWITCH -ENCLOSED

CATALOG LISTING
LZA-LZY SERIES
CHART 2

CATALOG LISTING LZA-LYZ SERIES CHART 2
PAGE 2 OF 2
RELEASE NO. PR-8093
REPLACES
ISSUE 5
CHECK
REVISIONS
A CO-93789 GJW 31 OCT 98
CHECK
CHECK
JAF 31 OCT 98
CHECK
GJW 31 OCT 98
FORMTEK

Downloaded from Elcodis.com electronic components distributor