MICRO SWITCH
FREEPORT, ILLINOIS, U S A
A DIVISION OF HONEYWELL
FED. MFG. CODE 91929

SWITCH-ENCLOSED

CATALOG LISTING
EXA-AR62

THIS DRAWING COVERS A PROPRIETARY ITEM AND IS THE PROPERTY OF MICRO SWITCH, A DIVISION OF HONEYWELL. THIS DRAWING IS NOT TO BE COPIED OR USED WITHOUT THE APPROVAL OF MICRO SWITCH.

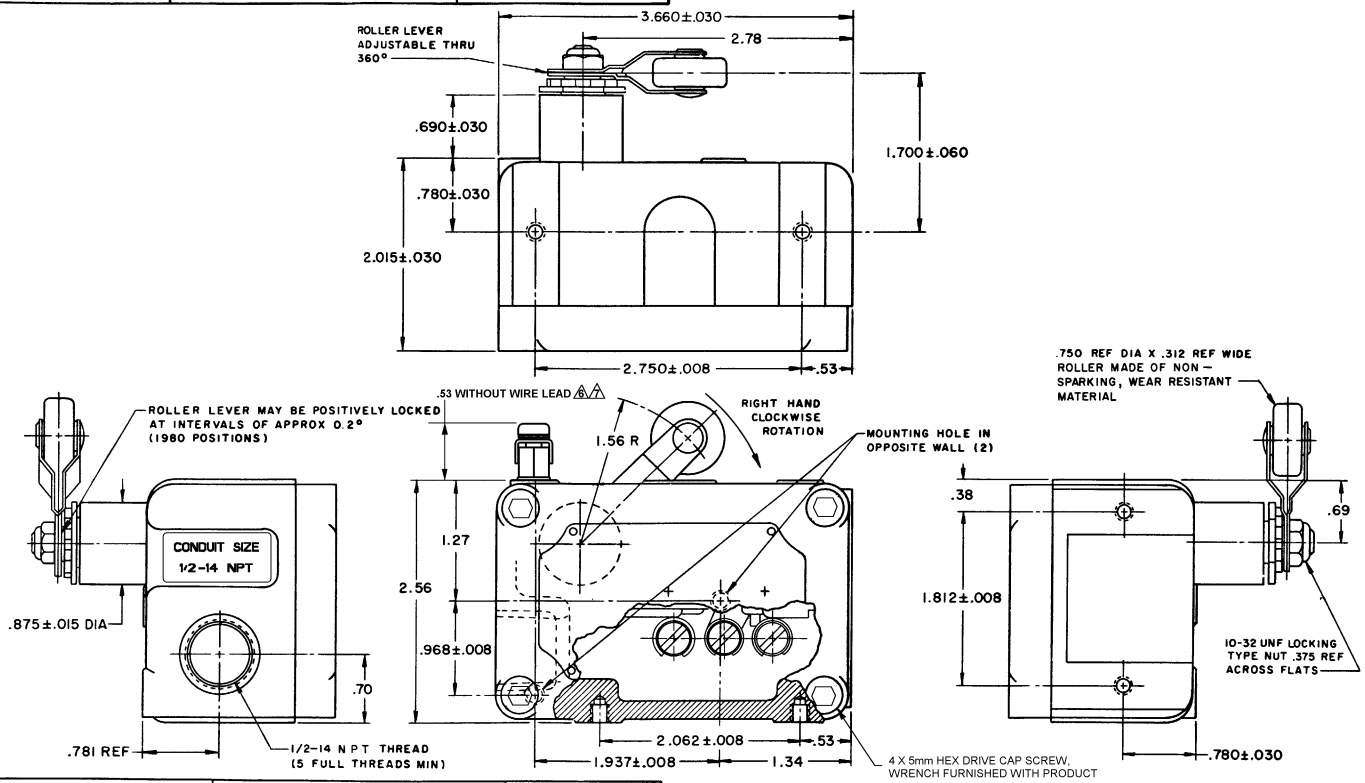

CHARACTERISTICS	ELECTRICAL DATA	
OPERATING FORCE — — — — — 12-32 OZ	CONTACT ARRANGEMENT S P D T	SCALE FULL
RELEASE FORCE — — — — — 8 OZ MIN	L 23	DO NOT SCALE PRINT
PRETRAVEL — — — — — .219 MAX (8°)	20A-125, 250 OR 480 VAC; 10A-125 VAC "L" 1 HP-125 VAC; 2HP-250 VAC	UNLESS OTHERWISE NOTED DIMENSIONS ARE IN INCHES
DIFFERENTIAL TRAVEL — — — — .012 MAX	1/2A-125 VDC; 1/4A-250 VDC	TOLERANCES ARE: ONE PLACE (.0) ±.030; TWO PLACE (.00) ±.015; THREE PLACE (.000) ±.005; ANGLES ±2°
DO NOT OVERTRAVEL MORE THAN — 25°		
SWITCH BASIC REPLACEMENT — — BA-2R-P4		WEIGHT

NOTE-
1 - MOUNTING SCREW HOLES, 10-32 UNF-2B THREADS X .219 REF DEEP (8)
2 - 8-32 UNC X .219 REF BINDING HEAD TERMINAL SCREW AND CUPWASHER (3)
3 - EXPLOSION PROOF - UNDERWRITER'S LAB. INC. LISTING FOR HAZARDOUS LOCATIONS NEMA 7, CLASS I, GROUPS C AND D, NEMA 9, CLASS II, GROUPS E, F AND G
4 - EUROPEAN HAZARDOUS LOCATIONS DESIGNATION: Ex dIIB + H2 T6 CATAGORY II 2 G
5 - SEAL RATING : NEMA 1
6 - EXTERNAL GROUND SCREW MAY BE ASSEMBLED TO ANY UNUSED MOUNTING SCREW HOLE
7 - ASSEMBLE PROVIDED SPLIT LOCKWASHER BETWEEN GROUND LUG AND HOUSING

EXA-AR62 | DRAWING NUMBER M | RELEASE NO. PR-3424 | REPLACES | ISSUE X 3 7 | 03DEC09 | CMH | CHECK | AK | 26APR05 | CHECK | LES | 21 JUN 73 | CHECK | DRAWN D B W 19 JUN 73

REVISIONS
A CO 83360 OSH 9 NOV 85
B CO61381 DAW 23 APR 87
C CO-70715-C SAV 6 NOV 91
D CO73019 MAW 19 SEP 92
E 0012750 DVM 26 APR 05
F 0059237 LK 03DEC09

RASTER FD-90378-003

Downloaded from Elcodis.com electronic components distributor