MICRO SWITCH
a Honeywell Division
FED.MFG.CODE 91929

MINIATURE PRECISION LIMIT SWITCH

CATALOG LISTING
914CE16-3N1

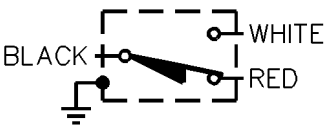

CIRCUIT DIAGRAM

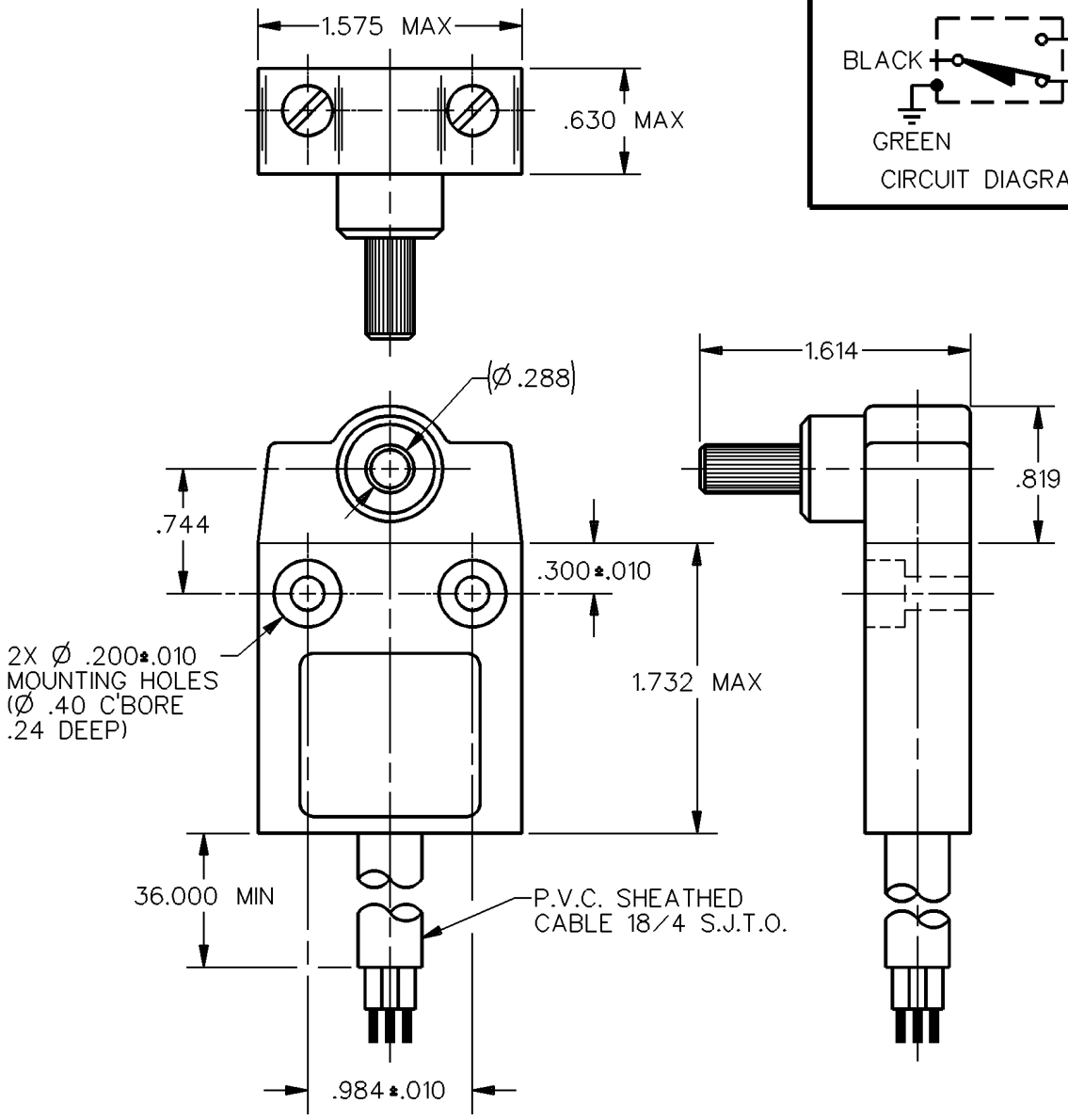

NOTES
1 – ZINC HOUSING FINISHED WITH GRAY PAINT
2 – SWITCH WILL ACTUATE IN BOTH DIRECTIONS

ANSI Y14.5M–1982 APPLIES

THIS DRAWING COVERS A PROPRIETARY ITEM AND IS THE PROPERTY OF MICRO SWITCH, A DIVISION OF HONEYWELL. THIS DRAWING IS NOT TO BE COPIED OR USED WITHOUT THE APPROVAL OF MICRO SWITCH.

THIRD ANGLE PROJECTION

CHARACTERISTICS	ELECTRICAL DATA	SCALE FULL — DO NOT SCALE PRINT
OPERATING FORCE — — — 3.5 IN. LB MAX	CONTACT ARRANGEMENT S P D T	UNLESS OTHERWISE SPECIFIED TOLERANCES ARE
RELEASE FORCE — — — — 6 IN. OZ MIN	5A 1/10HP – 125 OR 250 VAC	ONE PLACE (.0) ±.030
PRETRAVEL — — — — — — — 45° MAX		TWO PLACE (.00) ±.015
DIFFERENTIAL TRAVEL — — — 3° MAX		THREE PLACE (.000) ±.005
OVERTRAVEL — — — — — — 25° MIN		ANGLES ±
		WEIGHT

914CE16-3N1 | REPLACES
RELEASE NO. CO-69061
DRAWING NUMBER
ISSUE 1
CHECK
REVISIONS
CHECK
CHECK
CHECK
DRAWN S A V 10 OCT 91
DDM/CAD

Downloaded from Elcodis.com electronic components distributor