MICRO SWITCH
A DIVISION OF MINNEAPOLIS-HONEYWELL REGULATOR COMPANY
FREEPORT, ILLINOIS
FED. MFR. CODE 91929

SWITCH—ENCLOSED

CATALOG LISTING
EX-AR800

M

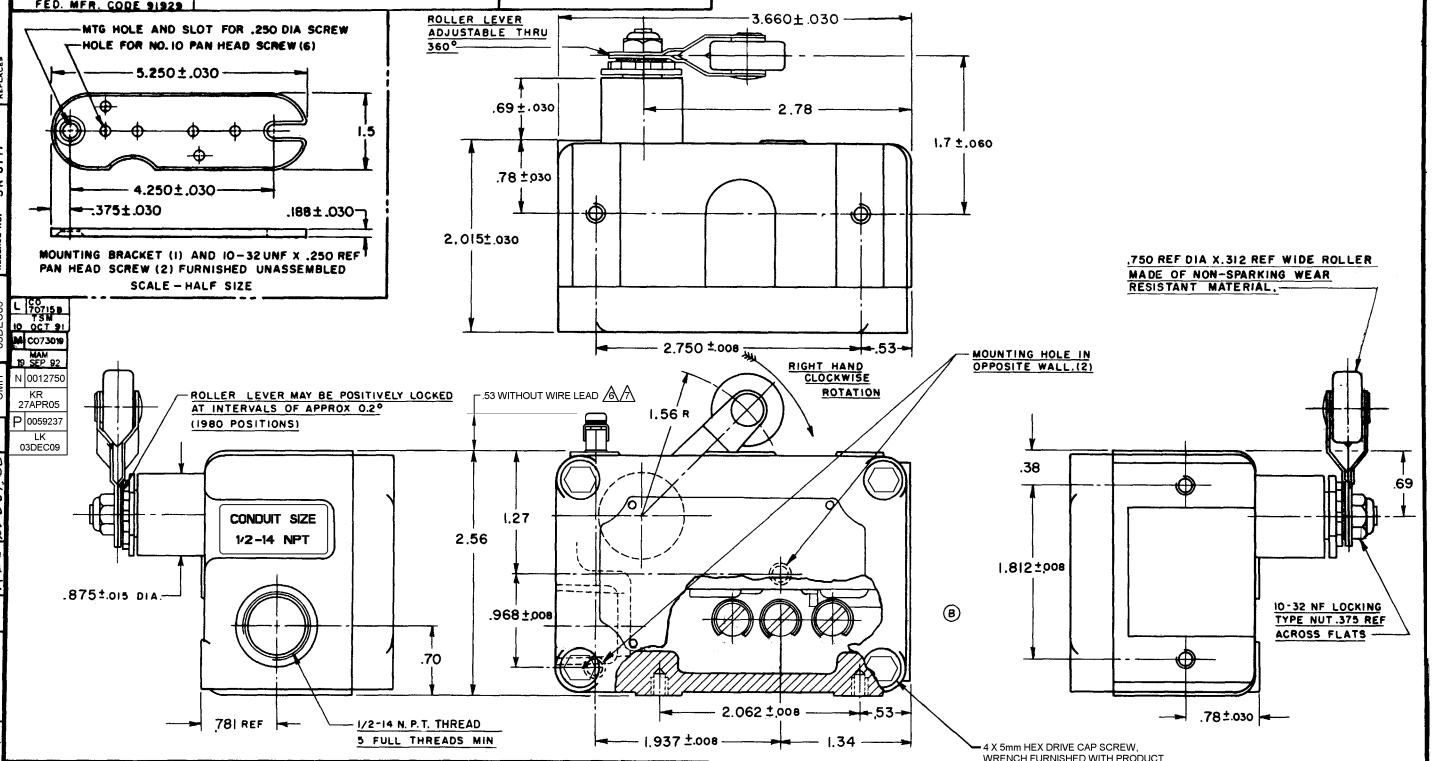

L	CO 70715B TSM 10 OCT 91
M	CO73019 MAN 19 SEP 92
N	0012750 KR 27APR05
P	0059237 LK 03DEC09

REVISIONS

A	SR 8717 MBF 13 JAN 6
B	CO 16851 MBF 10 DEC 62
C	CO 17653 MBF 20 JAN 64
D	CO 18276 RJW 18 JUNE 64
E	CO19878 RER 27 OCT 66
F	CO26103 DLF 18 JUL 69
G	CO31559 DBW 23 MAY 73
H	CO38995 WLW 16 AUG 77
J	CO 58360 CSH 9 NOV 85
K	CO61381 DAW 22 APR 87

REPLACES: SR 8717
RELEASE NO.: 03DEC09
DRAWING NUMBER: M 15
ISSUE: 3 4 5
CHECK: CMH
CHECK: REJ 20 OCT 58
CHECK: CCH 19 JAN 60
CHECK: 16 OCT. 58
DRAWN: M.B.F.
RASTER FO-50378.003

THIS DRAWING COVERS A PROPRIETARY ITEM AND IS THE PROPERTY OF MICRO SWITCH, A DIVISION OF MINNEAPOLIS-HONEYWELL REGULATOR CO. THIS DRAWING IS NOT TO BE COPIED OR USED WITHOUT THE APPROVAL OF MICRO SWITCH.

CHARACTERISTICS

OPERATING FORCE — — — 1/2-1 1/4 LBS
RELEASE FORCE — — — — — 1/4 LB MIN
PRETRAVEL — — — — — — .219 MAX 8°
DIFFERENTIAL TRAVEL — — .007 MAX 1/4°
DO NOT OVERTRAVEL MORE THAN — — — 90°
SWITCH-BASIC REPLACEMENT — — BZ-2R-P4

ELECTRICAL DATA

CONTACT ARRANGEMENT
S. P. D. T.

© -L96- 15 A-125, 250, OR 480 VAC
1/2 A-125 VDC; 1/4 A-250 VDC
1/8 HP-125 VAC, 1/4 HP-250 VAC

SCALE FULL
DO NOT SCALE PRINT

UNLESS OTHERWISE SPECIFIED
DIMENSIONS ARE IN INCHES
TOLERANCES ARE:

ONE PLACE	(.0)	±.030
TWO PLACE	(.00)	±.015
THREE PLACE	(.000)	±.005
ANGLES		±

WEIGHT

NOTE-
1 - MOUNTING SCREW HOLE, 10-32 NF-2B THREADS X .219 REF DEEP. (8)
2 - 8-32 NC X.219 REF TERMINAL SCREWS AND CUPWASHERS.
3 - EXPLOSION PROOF-UNDERWRITER'S LAB INC LISTING FOR HAZARDOUS LOCATIONS NEMA 7, CLASS I, GROUPS B, C AND D, NEMA 9, CLASS II GROUPS E, F AND G.
4 - EUROPEAN HAZARDOUS LOCATIONS DESIGNATION: Ex d IIB + H2 T6 CATAGORY II 2 G
5 - SEAL RATING: NEMA 1
6 EXTERNAL GROUND SCREW MAY BE ASSEMBLED TO ANY UNUSED MOUNTING SCREW HOLE
7 ASSEMBLE PROVIDED SPLIT LOCKWASHER BETWEEN GROUND LUG AND HOUSING

Downloaded from Elcodis.com electronic components distributor