Cat. No. W410-E1-01

SYSMAC
CS1W-GPI01

GP-IB Interface Unit

OPERATION MANUAL

OMRON

Downloaded from Elcodis.com electronic components distributor

CS1W-GPI01 GP-IB Interface Unit

Operation Manual

Produced September 2002

Downloaded from Elcodis.com electronic components distributor

Downloaded from Elcodis.com electronic components distributor

Notice:

OMRON products are manufactured for use according to proper procedures by a qualified operator and only for the purposes described in this manual.

The following conventions are used to indicate and classify precautions in this manual. Always heed the information provided with them. Failure to heed precautions can result in injury to people or damage to property.

⚠DANGER Indicates an imminently hazardous situation which, if not avoided, will result in death or serious injury.

⚠WARNING Indicates a potentially hazardous situation which, if not avoided, could result in death or serious injury.

⚠Caution Indicates a potentially hazardous situation which, if not avoided, may result in minor or moderate injury, or property damage.

OMRON Product References

All OMRON products are capitalized in this manual. The word “Unit” is also capitalized when it refers to an OMRON product, regardless of whether or not it appears in the proper name of the product.

The abbreviation “Ch,” which appears in some displays and on some OMRON products, often means “word” and is abbreviated “Wd” in documentation in this sense.

The abbreviation “PLC” means Programmable Controller. “PC” is used, however, in some Programming Device displays to mean Programmable Controller.

Visual Aids

The following headings appear in the left column of the manual to help you locate different types of information.

Note Indicates information of particular interest for efficient and convenient operation of the product.

1,2,3... 1. Indicates lists of one sort or another, such as procedures, checklists, etc.

© **OMRON, 2002**

All rights reserved. No part of this publication may be reproduced, stored in a retrieval system, or transmitted, in any form, or by any means, mechanical, electronic, photocopying, recording, or otherwise, without the prior written permission of OMRON.

No patent liability is assumed with respect to the use of the information contained herein. Moreover, because OMRON is constantly striving to improve its high-quality products, the information contained in this manual is subject to change without notice. Every precaution has been taken in the preparation of this manual. Nevertheless, OMRON assumes no responsibility for errors or omissions. Neither is any liability assumed for damages resulting from the use of the information contained in this publication.

Downloaded from Elcodis.com electronic components distributor

Downloaded from Elcodis.com electronic components distributor

TABLE OF CONTENTS

PRECAUTIONS xi

1 Intended Audience xii
2 General Precautions xii
3 Safety Precautions xiii
4 Operating Environment Precautions xiv
5 Application Precautions xv
6 EC Directives xvii

SECTION 1
Features and System Configuration 1

1-1 Features 2
1-2 Specifications and Device Configuration 3
1-3 Description of the GP-IB System 5
1-4 Comparison with other OMRON Units' GP-IB Functions 9

SECTION 2
Preparations 11

SECTION 3
Installation and Wiring 13

3-1 Component Names and Functions 14
3-2 Mounting the Unit in the PLC 16
3-3 Wiring the Cables 16
3-4 Setting the Unit Number 18

SECTION 4
Data Area and Buffer Memory Details 19

4-1 DM Area Allocations 20
4-2 CIO Area Allocations 23
4-3 Buffer Memory 27
4-4 Using IORD(222) and IOWR(223) 28

SECTION 5
Communicating in the GP-IB System 31

5-1 Master Mode Functions 32
5-2 Slave Mode Functions 36

Downloaded from Elcodis.com electronic components distributor

TABLE OF CONTENTS

SECTION 6
Programming Examples 43

6-1 Master Mode Program Examples 44
6-2 Slave Mode Program Examples 56
6-3 Enhanced BASIC Command Program Example 59

SECTION 7
Error Processing and Maintenance 61

7-1 Using LED Indicators for Error Processing 62
7-2 Using the Status Byte for Error Processing 62
7-3 Other Communications Problems 65

Appendices

A Sample Program 67
B List of Accessories 75

Index 77

Revision History 81

Downloaded from Elcodis.com electronic components distributor

About this Manual:

This manual describes the installation and operation of the GP-IB Interface Unit and includes the sections described below.

Please read this manual carefully along with any related manuals (see table below) and be sure you understand the information provided before attempting to install or operate the GP-IB Interface Unit. Be sure to read the precautions provided in the following section.

Precautions provides general precautions for using the GP-IB Interface Unit, Programmable Controller, and related devices.

Section 1 describes the features of the GP-IB Interface Unit and introduces the GP-IB communications system

Section 2 explains the main steps required to prepare for operation.

Section 3 explains the steps required for installation and wiring.

Section 4 explains the functions of the GP-IB Interface Unit's buffer memory and the words allocated in the DM area and CIO area

Section 5 explains the GP-IB Interface Unit's communications functions

Section 6 provides programming examples that demonstrate how to control the GP-IB system and transfer data from the ladder program.

Section 7 provides tables to help troubleshoot and correct errors that may occur when operating the GP-IB Interface Unit.

The Appendices provide a sample program and recommended accessories.

Name	Cat. No.	Contents
SYSMAC CS Series CS1W-GPI01 GP-IB Interface Unit Operation Manual	W410	Describes the hardware and software function of the GP-IB Interface Unit. (This manual)
SYSMAC CS/CJ Series CS1G/H-CPU□□-EV1, CS1G/H-CPU□□H, CJ1M-CPU□□, CJ1G-CPU□□, CJ1G/H-CPU□□H Programmable Controllers Instructions Reference Manual	W340	Describes the ladder diagram programming instructions supported by CS/CJ-series PLCs.
SYSMAC CS/CJ Series CS1G/H-CPU□□-EV1, CS1G/H-CPU□□H, CJ1M-CPU□□, CJ1G-CPU□□, CJ1G/H-CPU□□H Programmable Controllers Programming Manual	W394	This manual describes programming and other methods to use the functions of the CS/CJ-series PLCs.
SYSMAC CS Series CS1G/H-CPU□□-EV1, CS1G/H-CPU□□H Programmable Controllers Operation Manual	W339	Provides an outlines of and describes the design, installation, maintenance, and other basic operations for the CS-series PLCs.
SYSMAC WS02-CXP□□-E CX-Programmer User Manual Version 3.0	W361	Provide information on how to use the CX-Programmer, a programming device that supports the CS/CJ-series PLCs, and the CX-Net contained within CX-Programmer.

⚠ **WARNING** Failure to read and understand the information provided in this manual may result in personal injury or death, damage to the product, or product failure. Please read each section in its entirety and be sure you understand the information provided in the section and related sections before attempting any of the procedures or operations given.

Downloaded from Elcodis.com electronic components distributor

Downloaded from Elcodis.com electronic components distributor

PRECAUTIONS

This section provides general precautions for using the GP-IB Interface Unit, Programmable Controller, and related devices.

The information contained in this section is important for the safe and reliable application of the GP-IB Interface Unit. You must read this section and understand the information contained before attempting to set up or operate a GP-IB Interface Unit and PLC system.

1 Intended Audience xii
2 General Precautions xii
3 Safety Precautions xiii
4 Operating Environment Precautions xiv
5 Application Precautions xv
6 EC Directives xvii
6-1 Applicable Directives xvii
6-2 Concepts xvii
6-3 Conformance to EC Directives xvii
6-4 EMC Countermeasures xviii

Downloaded from Elcodis.com electronic components distributor

1 Intended Audience

This manual is intended for the following personnel, who must also have knowledge of electrical systems (an electrical engineer or the equivalent).

- Personnel in charge of purchasing FA devices.
- Personnel in charge of designing FA systems.
- Personnel in charge of installing and connecting FA devices.
- Personnel in charge of managing FA systems and facilities.

2 General Precautions

The user must operate the product according to the performance specifications described in the operation manuals.

Before using the product under conditions which are not described in the manual or applying the product to nuclear control systems, railroad systems, aviation systems, vehicles, combustion systems, medical equipment, amusement machines, safety equipment, and other systems, machines, and equipment that may have a serious influence on lives and property if used improperly, consult your OMRON representative.

Make sure that the ratings and performance characteristics of the product are sufficient for the systems, machines, and equipment, and be sure to provide the systems, machines, and equipment with double safety mechanisms.

This manual provides information for installing and operating OMRON GP-IB Interface Units. Be sure to read this manual before operation and keep this manual close at hand for reference during operation.

⚠ WARNING It is extremely important that a PLC and all PLC Units be used for the specified purpose and under the specified conditions, especially in applications that can directly or indirectly affect human life. You must consult with your OMRON representative before applying a PLC system to the above mentioned applications.

Downloaded from Elcodis.com electronic components distributor

3 Safety Precautions

⚠WARNING Never attempt to disassemble any Units while power is being supplied. Doing so may result in serious electrical shock or electrocution.

⚠WARNING Never touch any of the terminals while power is being supplied. Doing so may result in serious electrical shock or electrocution.

⚠WARNING Provide safety measures in external circuits (i.e., not in the Programmable Controller), including the following items, to ensure safety in the system if an abnormality occurs due to malfunction of the PLC or another external factor affecting the PLC operation. Not doing so may result in serious accidents.

- Emergency stop circuits, interlock circuits, limit circuits, and similar safety measures must be provided in external control circuits.
- The PLC will turn OFF all outputs when its self-diagnosis function detects any error or when a severe failure alarm (FALS) instruction is executed. As a countermeasure for such errors, external safety measures must be provided to ensure safety in the system.
- The PLC outputs may remain ON or OFF due to deposition or burning of the output relays or destruction of the output transistors. As a countermeasure for such problems, external safety measures must be provided to ensure safety in the system.
- When the 24-V DC output (service power supply to the PLC) is overloaded or short-circuited, the voltage may drop and result in the outputs being turned OFF. As a countermeasure for such problems, external safety measures must be provided to ensure safety in the system.

⚠Caution Execute online edit only after confirming that no adverse effects will be caused by extending the cycle time. Otherwise, the input signals may not be readable.

⚠Caution Confirm safety at the destination node before transferring a program to another node or changing contents of the I/O memory area. Doing either of these without confirming safety may result in injury.

Downloaded from Elcodis.com electronic components distributor

4 Operating Environment Precautions

Do not operate the control system in the following places.

- Where the PLC is exposed to direct sunlight.
- Where the ambient temperature is below 0°C or over 55°C.
- Where the PLC may be affected by condensation due to radical temperature changes.
- Where the ambient humidity is below 10% or over 90%.
- Where there is any corrosive or inflammable gas.
- Where there is excessive dust, saline air, or metal powder.
- Where the PLC is affected by vibration or shock.
- Where any water, oil or chemical may splash on the PLC.

⚠ **Caution** Take appropriate and sufficient countermeasures when installing systems in the following locations:

- Locations subject to static electricity or other forms of noise.
- Locations subject to strong electromagnetic fields.
- Locations subject to possible exposure to radioactivity.
- Locations close to power supplies.

⚠ **Caution** The operating environment of the PLC System can have a large effect on the longevity and reliability of the system. Improper operating environments can lead to malfunction, failure, and other unforeseeable problems with the PLC System. Be sure that the operating environment is within the specified conditions at installation and remains within the specified conditions during the life of the system.

Downloaded from Elcodis.com electronic components distributor

5 Application Precautions

Observe the following precautions when using the GP-IB Interface Unit or the PLC.

⚠WARNING Failure to abide by the following precautions could lead to serious or possibly fatal injury. Always heed these precautions.

- Always ground the system to 100 Ω or less when installing the system to protect against electrical shock.
- Always turn OFF the power supply to the PLC before attempting any of the following. Performing any of the following with the power supply turned ON may lead to electrical shock:
  - Mounting or removing any Units (e.g., I/O Units, CPU Unit, Power Supply Unit, etc.) or Memory Cassettes.
  - Assembling any devices or racks.
  - Changing DIP switch or rotary switch settings.
  - Connecting or disconnecting any cables or wiring.

⚠Caution Failure to abide by the following precautions could lead to faulty operation of the PLC or the system or could damage the PLC or PLC Units. Always heed these precautions.

- Take measures to stabilize the power supply to conform to the rated supply (e.g., voltage and frequency) if it is not stable.
- Provide circuit breakers and other safety measures to provide protection against shorts in external wiring.
- Always disconnect the LG terminal when performing withstand voltage tests.
- Do not attempt to take any Units apart, to repair any Units, or to modify any Units in any way.
- Be sure to tighten Backplane screws, bus and connecting unit mounting screws, terminal screws, and cable connector screws to the torque specified in operation manuals.
- Leave the label attached to the Unit when wiring. Removing the label may result in malfunction if foreign matter enters the Unit.
- Remove the label after the completion of wiring to ensure proper heat dissipation. Leaving the label attached may result in malfunction.
- Use crimp terminals for wiring. Do not connect bare stranded wires directly to terminals. Connection of bare stranded wires may result in burning.
- Double-check all wiring and switch settings before turning ON the power supply. Incorrect wiring may result in burning.
- Install and wire all Units according to instructions in the operation manuals. Improper installation may cause faulty operation.
- When transporting the Unit, pack it in the special box provided in which it was originally shipped and do not allow it to be subjected to vibration or shock during transportation.

Downloaded from Elcodis.com electronic components distributor

- Check the user program for proper execution before actually running it on the Unit. Not checking the program may result in an unexpected operation.
- Confirm that no adverse effect will occur in the system before attempting any of the following. Not doing so may result in an unexpected operation.
  - Changing the operating mode of the PLC.
  - Force-setting/force-resetting any bit in memory.
  - Changing the present value of any word or any set value in memory.
- Observe the following precautions when wiring communications cables. Doing any of these may damage the cables.
  - Separate the cables from high-voltage lines.
  - Do not bend the cables beyond their natural limit.
  - Do not pull on the cables.
  - Do not place objects on top of the cables.
  - Always place the cables in wiring ducts.
- Before touching a Unit, be sure to first touch a grounded metallic object in order to discharge any static build-up. Not doing so may result in malfunction or damage.
- Resume operation only after transferring to the new CPU Unit the contents of the DM Area, HR Area, and other data required for resuming operation. Not doing so may result in an unexpected operation.

Downloaded from Elcodis.com electronic components distributor

6 EC Directives

6-1 Applicable Directives

- EMC Directives

6-2 Concepts

EMC Directives

OMRON devices that comply with EC Directives also conform to the related EMC standards so that they can be more easily built into other devices or the overall machine. The actual products have been checked for conformity to EMC standards (see the following note). Whether the products conform to the standards in the system used by the customer, however, must be checked by the customer.

EMC-related performance of the OMRON devices that comply with EC Directives will vary depending on the configuration, wiring, and other conditions of the equipment or control panel on which the OMRON devices are installed. The customer must, therefore, perform the final check to confirm that devices and the overall machine conform to EMC standards.

Note Applicable EMC (Electromagnetic Compatibility) standards are as follows:
EMS (Electromagnetic Susceptibility): EN61000-6-2
EMI (Electromagnetic Interference): EN50081-2
(Radiated emission: 10-m regulations)

6-3 Conformance to EC Directives

The CS1W-GPI01 GP-IB Interface Unit complies with EC Directives. To ensure that the machine or device in which the Unit is used complies with EC directives, the GP-IB Interface Unit must be installed as follows:

1,2,3...

1. The GP-IB Interface Unit must be installed within a control panel. Use the SA20-712 control panel manufactured by NITTO Electric Works or a similar control panel.
2. Reinforced insulation or double insulation must be used for the DC power supplies used for the I/O power supply.
3. The GP-IB Interface Unit complying with EC Directives also conforms to the Common Emission Standard (EN50081-2), particularly the 10-m regulations. When a GP-IB Interface Unit is built into a machine, however, noise can be generated due to the configuration of the control panel and connected devices, causing the overall machine to fail to meet the Standards. The user must confirm and take measures to ensure that the overall machine meets the Standards.

Downloaded from Elcodis.com electronic components distributor

6-4 EMC Countermeasures

The CS1W-GPI01 GP-IB Interface Unit test conditions are as follows:

- Ferrite cores were attached to the GP-IB cables.

Recommended Ferrite Core

Ferrite Core (data line noise filter): 0443-164151 manufactured by Nisshin Electric Co., Ltd.

Low impedance: 25 MHz: 90 Ω, 100 MHz: 160 Ω

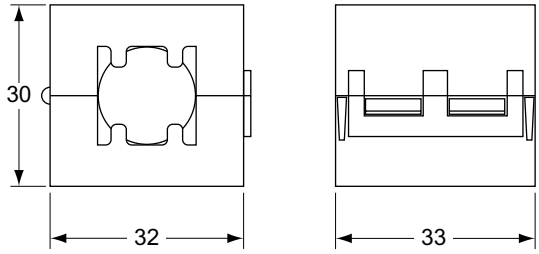

Recommended Mounting Method

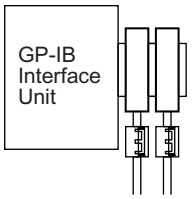

As shown in the diagram, mount the ferrite cores as close at possible to the end of the communications cables.

Downloaded from Elcodis.com electronic components distributor

SECTION 1
Features and System Configuration

This section describes the features of the GP-IB Interface Unit and introduces the GP-IB communications system.

1-1 Features 2
1-2 Specifications and Device Configuration 3
1-2-1 General Specifications 3
1-2-2 Functional Specifications 4
1-2-3 System Configuration 5
1-2-4 GP-IB Cables 5
1-3 Description of the GP-IB System 5
1-3-1 GP-IB System Configuration 5
1-3-2 GP-IB Bus Line Specifications 6
1-3-3 GP-IB Device Functions 7
1-4 Comparison with other OMRON Units' GP-IB Functions 9
1-4-1 Functional Comparison 9
1-4-2 Differences in the Units' Interface Functions 10

Downloaded from Elcodis.com electronic components distributor

1-1 Features

The CS1W-GPI01 GP-IB Interface Unit connects GP-IB devices to a CS-series PLC to provide communications between the GP-IB devices and the CS-series PLC.

The GP-IB Interface Unit has the following features.

Conforms to the IEEE-488-1978 Standards

The GP-IB Interface Unit conforms to the standard IEEE-488-1978 interface specifications. Devices equipped with an IEEE-488 interface, such as computers or measurement devices, can be connected to a CS-series PLC through a GP-IB cable to allow data transfers to and from the PLC.

Control GB-IP Communications from the Ladder Program

When the GP-IB Interface Unit is installed, it is easy to transfer data and control the devices connected to the Unit from the CPU Unit's ladder program.
To transfer data and control the devices connected to the Unit, just read and write data to the GP-IB Interface Unit's buffer memory.

The INTELLIGENT I/O READ and INTELLIGENT I/O WRITE instructions (IORD(222) and IOWR(223)) are used to read and write data in the buffer memory.

Master and Slave Modes

The GP-IB Interface Unit can operate as a Controller in Master mode or as a Talker or Listener in Slave mode.

Master Mode

The GP-IB Interface Unit can perform the following functions as a Controller.

- Control Connected Devices
  To perform control operations such as Device Clear and Device Trigger, write the message type and device address to the GP-IB Interface Unit's buffer memory by executing IOWR(223) in the CPU Unit's ladder program. When the necessary data has been written to the buffer memory, turn ON the Send Interface Message Request Bit.
- Send Data
  To send data to a connected device, write the transmission data and device address to the GP-IB Interface Unit's buffer memory with IOWR(223) and then turn ON the Send Data Request Bit.
- Receive Data
  To read data from a connected device, write the sending and receiving devices' addresses to the GP-IB Interface Unit's buffer memory with IOWR(223) and then turn ON the Read Data Request Bit. When the data has been received, the Data Read Completed Flag will be turned ON. Execute IORD(222) to read the received data from the GP-IB Interface Unit's buffer memory.
- Receive SRQ Message (Interrupt Response)
  An external interrupt task can be started in the CS-series PLC when an SRQ message is received.

Slave Mode

The GP-IB Interface Unit can perform the following functions as a Talker or Listener.

- Send Data
  If there was a Send Request from the Controller, transmit data to the connected device by writing the transmission data to the GP-IB Interface Unit's buffer memory with IOWR(223) and then turning ON the Send Data Request Bit.
- Receive Data
  If there was a Read Request from the Controller, data received from a connected device will be stored in the GP-IB Interface Unit's buffer mem-

Downloaded from Elcodis.com electronic components distributor

ory.
If the Data Read Completed Flag has been turned ON, transfer the data from the connected device to the CS-series CPU Unit by executing IORD(222) to read the received data from the GP-IB Interface Unit's buffer memory.

- Send SRQ Message (Interrupt Request)
  An SRQ message can be sent to the system's Controller.
- Support of Enhanced BASIC Commands
  The GP-IB Interface Unit supports the special commands for GP-IB Interface Units (OS, IN, OD, and ID). The Enhanced BASIC commands are compatible with the C500-GPI01.

1-2 Specifications and Device Configuration

1-2-1 General Specifications

The general specifications are within the specifications for the CS-series PLCs.

Downloaded from Elcodis.com electronic components distributor

1-2-2 Functional Specifications

Item	Specification
Name	SYSMAC CS-series GP-IB Interface Unit
Model number	CS1W-GPI01
Compatible PLCs	CS-series PLCs
Unit type	CS-series Special I/O Unit
Mounting location	CS-series CPU Rack or CS-series Expansion Rack
Max. number of GP-IB Interface Units	Up to 4 GP-IB Interface Units/CPU Unit
Unit number setting range	0 to 95
GP-IB Interface Unit settings when editing the I/O tables offline with the CX-Programmer	• Number of unit numbers occupied: 1 • Number of input words occupied: 5 • Number of output words occupied: 5
Transmission method	8-bit parallel data transfer
Communications method	Half duplex
Interface	Conforms to IEEE-488-1978 (24-pin) standards
Handshaking method	Three-line handshaking
Functional specifications (GP-IB interface functions)	Master mode: SH1, AH1, T6, TE0, L4, LE0, C1 to C4, and C28 Slave mode: SH1, AH1, T6, TE0, L4, LE0, SR1, RL0, PP0, DC1, and DT0
Connection configurations	Star configuration or daisy-chain configuration
Transmission distance	Limits on the length of cables in the system (All three of these conditions must be satisfied simultaneously.) • Total cable length ≤ Number of devices in the system × 2 m • Total cable length ≤ 20 m • Length of a single cable ≤ 4 m (for a 1:1 connection)
Max. number of connected devices	15 devices max. including the GP-IB Interface Unit
GP-IB device address	0 to 30
Delimiters	Select from the following: CR + LF, CR, LF, EOI, or user-set code.
Max. data transfer size	512 bytes max. in a single reception or transmission
Max. number of connectors	2 (See note.)
Current consumption	5 VDC, 330 mA
Dimensions	35 × 130 × 101 mm (W × H × D)
Weight	258 g max.

Note Max. Number of GP-IB Connectors
The GP-IB connector is equipped with a plug and a receptacle, so the connectors can be stacked when necessary. Up to two GP-IB connectors can be connected to a CS-series GP-IB Interface Unit when necessary.

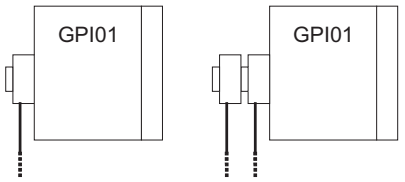

One connector connected

Up to two connectors can be connected.

Downloaded from Elcodis.com electronic components distributor

1-2-3 System Configuration

The CS1W-GPI01 GP-IB Interface Unit can operate in Master mode or Slave mode.

In Master mode, the Unit can control the GP-IB bus.
In Slave mode, the Unit can send and receive data according to commands from the Controller.

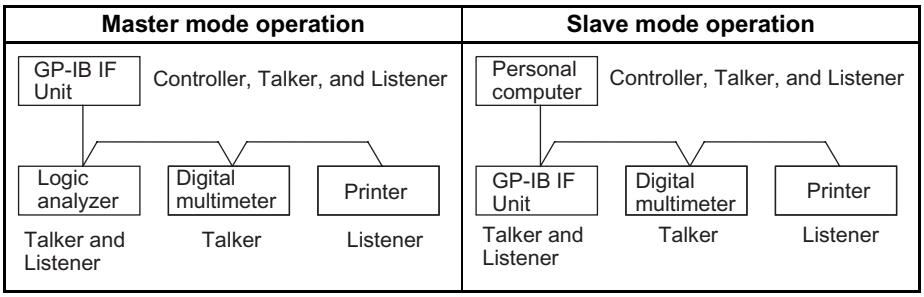

Note There are three kinds of devices that can be connected in a GP-IB system: Controllers, Talkers, and Listeners. Some devices include more than one of these functions.

1-2-4 GP-IB Cables

The GP-IB Interface Unit is connected to other devices with GP-IB Cable. Use the recommended cables listed in the following table.

Name	Model	Length	Manufacturer
GP-IB Harness	408JE-10P5	0.5 m	DDK Electronics, Inc.
	408JE-101	1 m	
	408JE-102	2 m	
	408JE-104	4 m	

1-3 Description of the GP-IB System

The GP-IB (General Purpose Interface Bus) system is an interface that connects equipment such as measurement devices and computers. The GP-IB specifications have been standardized in the IEEE-488 and IEC-625 standards.

1-3-1 GP-IB System Configuration

In a GP-IB system, all of the devices are connected in parallel, as shown in the following diagram.

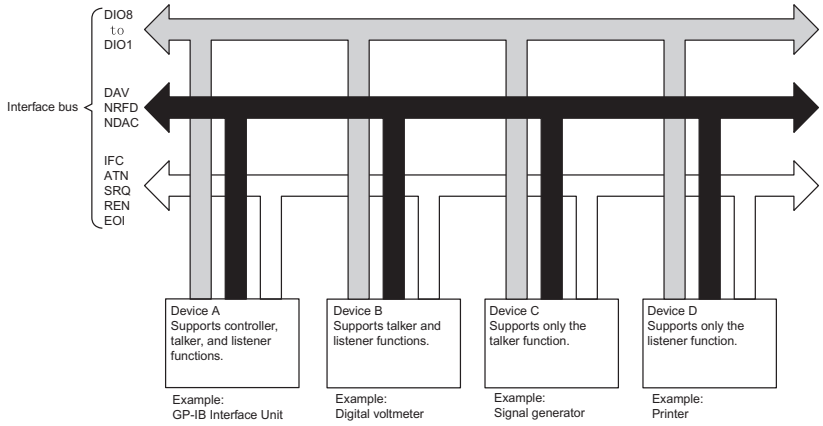

Downloaded from Elcodis.com electronic components distributor

System Restrictions

- There must be no more than 15 interfaces (devices) connected in one system.
- The total length of communications cable in the system must not exceed 20 m or 2 m × the number of devices in the system, whichever is shorter.
- The length of any one cable (between two devices) must not exceed 4 m.

GP-IB System Functions

There are three kinds of devices that can be connected in a GP-IB system: Controllers, Talkers, and Listeners. (Some devices include more than one of these functions.) These three functions are explained below.

Controller

The Controller controls communications in the entire GP-IB system. The Controller specifies the devices that receive data and messages (Listeners), specifies the devices that send data (Talkers), and manages the system

Normally, only one Controller is allowed in one system. Even if two or more Controllers are connected to the same bus, only one of the devices can actually operate as the Controller.

Talkers

A Talker sends data when directed to do so by the Controller.
Talkers include devices such as digital multimeters, which output measurement data. Only one Talker can operate in the system at a time.

Listeners

A Listener receives data when directed to do so by the Controller.
Listeners include devices such as printers. Unlike Talkers, two or more Listeners can operate in the system simultaneously.

1-3-2 GP-IB Bus Line Specifications

The GP-IB cable has 16 signal lines and 8 ground lines, as shown in the following diagram.

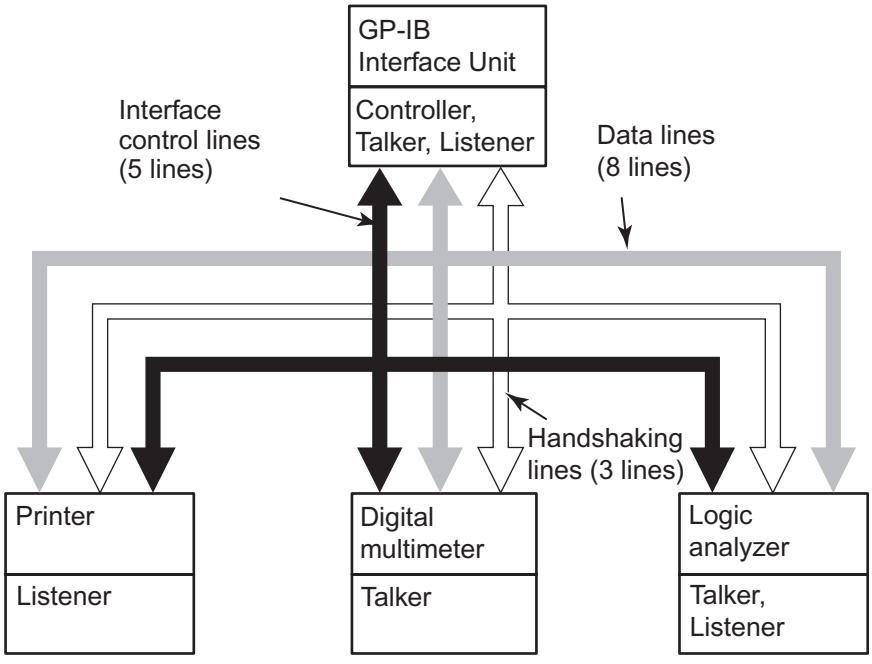

Downloaded from Elcodis.com electronic components distributor

Signal Line Configuration

Lines	Signal name	Function
Data lines	DIO1 (Data Input/Output 1)	These lines transfer the data. Examples: Address Command Measurement data Program data Display data Status
	DIO2 (Data Input/Output 2)	
	DIO3 (Data Input/Output 3)	
	DIO4 (Data Input/Output 4)	
	DIO5 (Data Input/Output 5)	
	DIO6 (Data Input/Output 6)	
	DIO7 (Data Input/Output 7)	
	DIO8 (Data Input/Output 8)	
Handshake lines	DAV (Data Valid)	Indicates that data is valid and can be read.
	NRFD (Not Ready For Data)	Indicates that the device is ready to receive.
	NDAC (Not Data Accepted)	Indicates that the data has been read.
Control lines	ATN (Attention)	Indicates when the data on the bus is an address or command.
	IFC (Interface Clear)	Initializes the interface.
	SRQ (Service Request)	Requests a service interrupt.
	REN (Remote Enable)	Specifies remote or local mode.
	EOI (End Of Identity)	Indicates the last byte of data.

Connector Pin Allocation

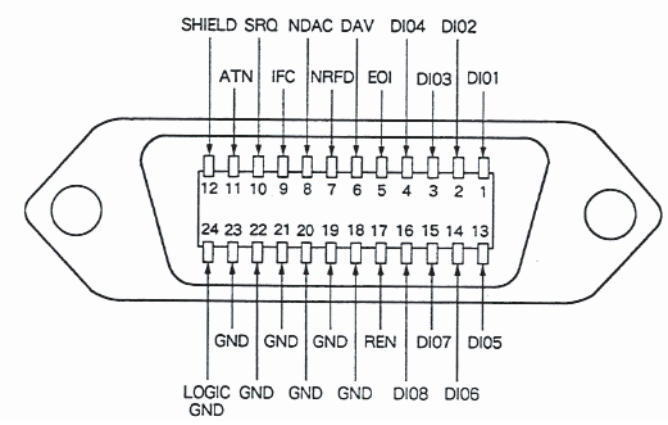

1-3-3 GP-IB Device Functions

Primary Addresses

In a GP-IB system, each device has its own address known as its primary address. The device addresses range from 0 to 30 and are used to identify each individual device. (Even though there are 31 device addresses available, the max. number of devices in a GP-IB system is 15.)

When the Controller specifies another device as a Talker or Listener, the Controller uses the other device's primary address to identify it. Set the GP-IB Interface Unit's primary address in the allocated DM area word (bits 00 to 07 of word m.)

Downloaded from Elcodis.com electronic components distributor

Interface Messages

Interface messages control the GP-IB devices' interface functions and device functions. The following table lists the messages that can control the GP-IB Interface Unit.

Interface message	Function
Device Trigger	Send a GET message and trigger devices. It is possible to trigger operation in one GP-IB device or several devices simultaneously.
Set Remote Status	Set control line REN to "L" and switch devices to remote mode. Switch one GP-IB device to remote mode or switch several devices simultaneously.
Device Clear	Initialize a selected GP-IB device or all devices in the system. Send a DCL message when a device address is not being specified. Send an SDC message when specifying a device address.
Set Local Status	Switch a selected GP-IB device or all devices in the system to local mode. Set control line REN to "H" when a device address is not being specified. Send a GTL message when specifying a device address.
Set Local Lockout	Prohibit the local functions of the GP-IB devices. It is possible to prohibit operations from each device's front panel. Send an LLO message to lockout local operations.
Serial Poll	It is possible to read the status (status byte) of GP-IB devices. Send an SPE message and specify the addresses of the desired devices to request the devices' status data. Send an SPD message to disable serial polling if an SRQ output is detected or the status data has been read from all of the specified devices.
Interface Clear	Initialize the GP-IB devices. Set control line IFC to "L" for 100 μs.

Note

1. Interface messages can be sent only when the GP-IB Interface Unit is in Master mode (operating as the Controller.)
2. When the GP-IB Interface Unit is in Slave mode, it supports only the Interface Clear, Device Clear, and Serial Poll interface messages. If the system Controller sends any other interface message, no processing will be performed for that message.

Transferring Commands and Data

To operate the GP-IB devices, set the ATN line to "L" and send the commands to all devices connected to the bus. The bus will be in command mode when the ATN line is set to "L", so the GP-IB devices will interpret data sent through the bus as a command and then operate according to that command.

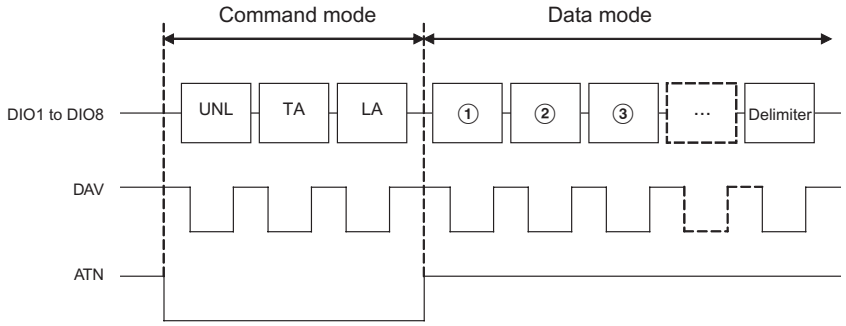

UNL: Unlisten command
TA: Talker address
LA: Listener address

①, ②, ③ ...: Data
Delimiter: CR + LR, CR, etc. (selectable)

Downloaded from Elcodis.com electronic components distributor

1,2,3...

1. The Controller sets the ATN line to "L" and sends the UNL command. This command inactivates the connected GP-IB devices.
2. The Controller sends the TA (Talker address) and LA (Listener address). Two or more Listener addresses can be specified. This step determines the new Talker and Listener(s) and the relevant GP-IB devices will standby.
3. The Controller sets the ATN line to "H" to put the bus in data mode. At this point, data will be transferred between the Talker and Listener(s).

Note The GP-IB Interface Unit automatically controls the ATN line status to switch the bus between command mode and data mode and automatically sends commands such as UNL, TA, and LA.

Service Request and Serial Poll

A device connected to the GP-IB system can generate an interrupt to the system Controller for a service request by setting the SRQ line to "L."

When the Controller detects the "L" level in the SRQ line, it performs a Serial Poll operation to identify the device that generated the interrupt. The Controller performs the Serial Poll operation by requesting the transfer of each device's status byte in order, as shown in the following diagram.

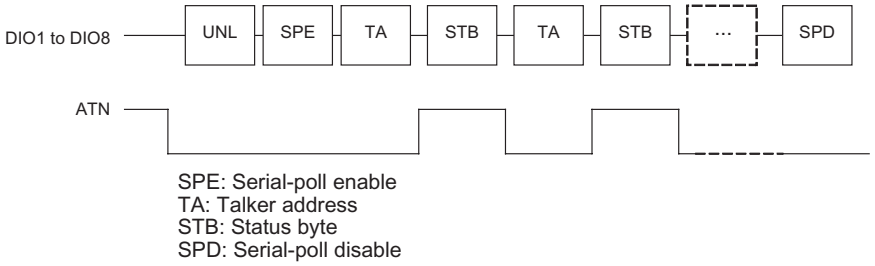

1-4 Comparison with other OMRON Units' GP-IB Functions

1-4-1 Functional Comparison

Model	CS1W-GPI01	C500-GPI01	CV500-BSC51/61
Compatible PLCs	CS-series	CVM1, CV-series, and C1000H/C2000H	CVM1 and CV-series
Master/Slave modes	Master and Slave modes	Slave mode only	Master and Slave modes
Control from the program	Operation can be controlled by writing data to the Unit's buffer memory from the ladder program with the IOWR/IORD instructions (CS-series and C1000H/C2000H PLCs) or WRIT/READ instructions (CVM1 and CV-series PLCs.)		Control operation with the BASIC program in the BASIC Unit.
Parallel poll responses	Not supported.		Supported.
Execution of Enhanced BASIC commands	Supported.		Not supported.
SRQ transmissions	Supported.		

Downloaded from Elcodis.com electronic components distributor

1-4-2 Differences in the Units' Interface Functions

Interface function	CS1W-GPI01	C500-GPI01	CV500-BSC51/61
SH	SH1		
AH	AH1		
T	T8/T6	T6	T8/T6
L	L4		
SR	SR1		
RL	RL0		RL1
PP	PP0		PP1
DC	DC1		
DT	DT0		
C	C1, C2, C3, C4, and C28	C0	C1, C2, C3, C4, and C26

Downloaded from Elcodis.com electronic components distributor

SECTION 2
Preparations

This section explains the main steps required to prepare for operation.

Downloaded from Elcodis.com electronic components distributor

The following table outlines the basic steps required before using the GP-IB Interface Unit.

Step	Operation	Remarks	Reference
1	Mount Unit in the PLC.	---	*3-2 Mounting the Unit in the PLC*
2	Wire the cables.	---	*3-3 Wiring the Cables*
3	Set the unit number.	Set the GP-IB Interface Unit's unit number (0 to 95) with the rotary switch on the front of the Unit.	*3-4 Setting the Unit Number*
4	Turn ON the PLC.	---	---
5	Create I/O tables.	Use a Programming Device to create the I/O tables.	---
6	Make required settings in allocated DM area words.	Make settings such as the primary address, Master/Slave mode, and delimiter.	*4-1-1 Allocation of DM Area Words*
7	Turn the PLC OFF and ON again.	The new DM system settings are read and enabled when the GP-IB Interface Unit is turned ON.	---
8	Create and execute the PLC's user program.	Create a communications program suing IORD(222) and IOWR(223).	*SECTION 5 Communicating in the GP-IB System*

Downloaded from Elcodis.com electronic components distributor

SECTION 3
Installation and Wiring

This section explains the steps required for installation and wiring.

3-1 Component Names and Functions 14
3-1-1 Unit Appearance 14
3-1-2 Dimensions (Unit: mm) 14
3-1-3 Indicators 15
3-2 Mounting the Unit in the PLC. 16
3-3 Wiring the Cables 16
3-3-1 Daisy-chain Configuration 16
3-3-2 Star Configuration 17
3-3-3 Recommended Cables 17
3-3-4 Connecting the Cables 17
3-4 Setting the Unit Number 18

Downloaded from Elcodis.com electronic components distributor

3-1 Component Names and Functions

3-1-1 Unit Appearance

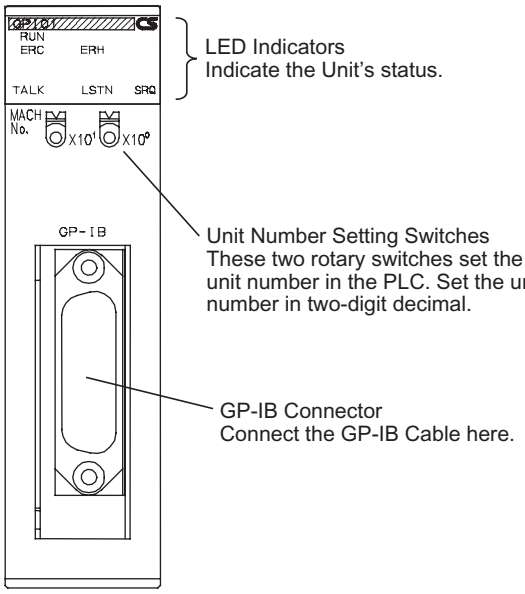

3-1-2 Dimensions (Unit: mm)

Dimensions without a Cable Connected

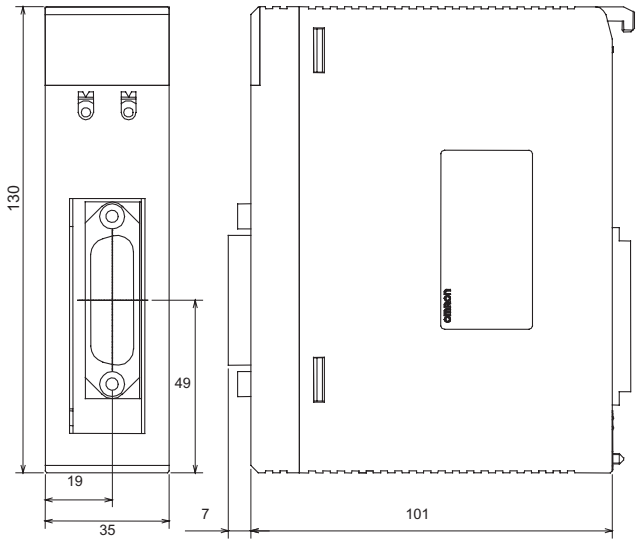

Downloaded from Elcodis.com electronic components distributor

Dimensions with Two Cables Connected

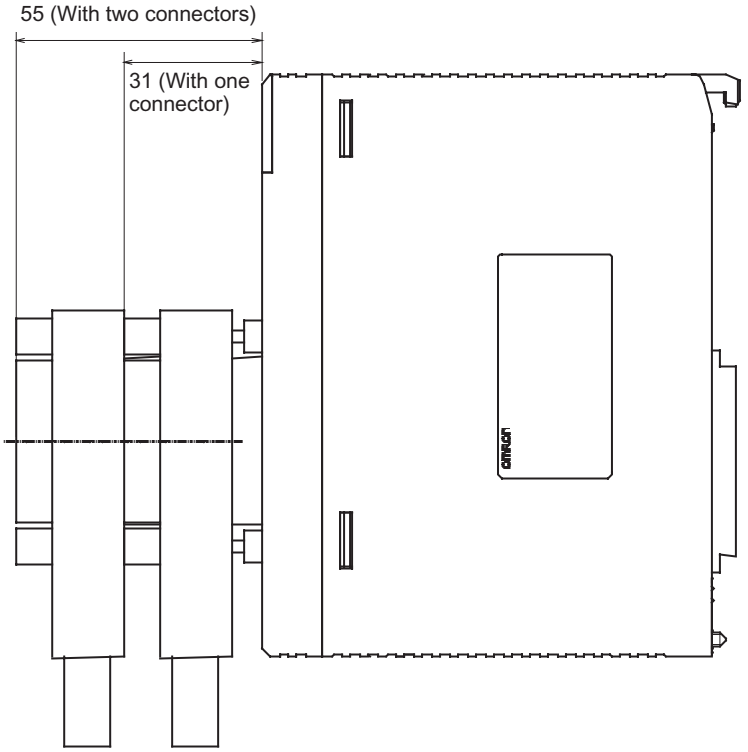

3-1-3 Indicators

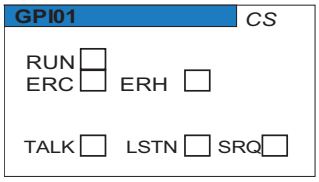

Indicator	Color	Name	Status	Meaning
RUN	Green	Unit Operating	Lit	Unit is operating normally.
			Not Lit	Unit error
ERC	Red	GPIB Communications Error	Lit	A communications error occurred in the system.
			Not Lit	No communications error
ERH	Red	CPU Unit Error	Lit	A CPU Unit error occurred.
			Not Lit	No CPU Unit error
TALK	Yellow	Operating as Talker	Lit	Unit is operating as a Talker.
			Not Lit	Not operating as a Talker
LSTN	Yellow	Operating as Listener	Lit	Unit is operating as a Listener.
			Not Lit	Not operating as a Listener
SRQ	Yellow	Receiving/Sending SRQ	Lit	An SRQ signal is being received or sent.
			Not Lit	No SRQ signal

Downloaded from Elcodis.com electronic components distributor

3-2 Mounting the Unit in the PLC

The GP-IB Interface Unit must be mounted in the PLC (CPU Backplane or Expansion Backplane) to be used. Refer to the *CS Series Programmable Controllers Operation Manual* for details on installing the Unit in the Backplane.

Note

1. Always turn OFF the PLC before mounting the Unit.
2. Tighten the PLC's Backplane mounting screws to a torque of 0.9 N·m and tighten the Unit fastening screw to a torque of 0.4 N·m.
3. The GP-IB Interface Unit has a protective label on the top of the Unit that label prevents wire strands and other foreign matter from entering the Unit. Leave this label attached during wiring and installation procedures.
4. After the Unit has been mounted and wiring has been completed, remove the protective label to allow air circulation needed for cooling.

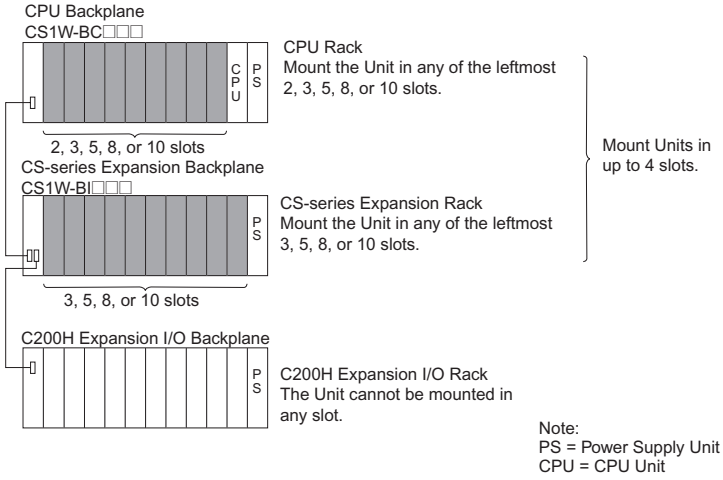

5. If other CS-series Special I/O Units are being mounted, the total number of CS-series Special I/O Units in a single PLC must not exceed 96 Units.

Note If the GP-IB Interface Unit is mounted in a CS-series Expansion Backplane, the GP-IB Interface Unit cannot start an external interrupt task in the specified CPU Unit when the Interface Unit receives an SRQ message from a Talker or Listener. Mount the GP-IB Interface Unit in the CPU Backplane if it is necessary to start an external interrupt task in the CPU Unit after receiving an SRQ message.

3-3 Wiring the Cables

Use GP-IB Cable to connect the GP-IB devices in a daisy-chain configuration or star configuration.

3-3-1 Daisy-chain Configuration

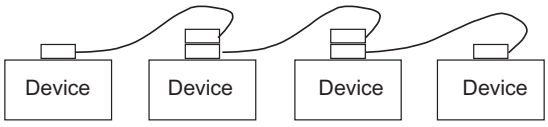

Downloaded from Elcodis.com electronic components distributor

3-3-2 Star Configuration

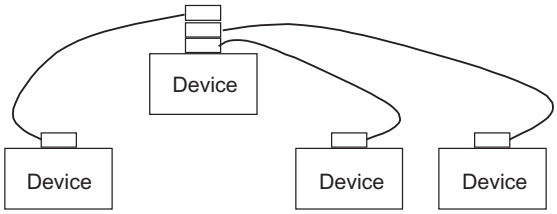

It is also possible to combine daisy-chain and star configurations in the same system.

Note Up to two GP-IB Cable Connectors can be connected at the GP-IB Interface Unit. In addition, the following restrictions apply to cable lengths in the system:

- Total cable length: 20 m max.
- Total cable length: Number of devices × 2 m max.
- Single cable length: 4 m max. (when connecting 1:1)

All three of these conditions must be satisfied simultaneously.

3-3-3 Recommended Cables

Name	Model	Length	Manufacturer
GP-IB Harness	408JE-10P5	0.5 m	DDK Electronics, Inc.
	408JE-101	1 m	
	408JE-102	2 m	
	408JE-104	4 m	

3-3-4 Connecting the Cables

Use the following procedure to connect the cables.

1,2,3...

1. Insert the cable connector into the GP-IB Interface Unit's connector.
2. Tighten the connector attachment screws.

Note

1. Turn OFF the PLC and the other devices in the system before connecting or disconnecting cables.
2. There is a protective label on the top of the GP-IB Interface Unit. Leave this label attached during wiring and installation procedures.
3. After wiring the Unit, remove the protective label to allow air circulation needed for cooling.
4. Always tighten the connector attachment screws. Tighten the screws to a torque of 0.6 N·m.
5. Double check the wiring before turning ON the power.
6. Observe the following precautions when wiring.
   - Keep the communications cables away from power lines and high-voltage lines.
   - Do not bend the cable sharply.
   - Do not pull on the cable.
   - Do not place objects on top of the cables.
   - Always route the cables within ducts.
7. Before handling the Unit, touch a grounded metal object to discharge any static electricity.

Downloaded from Elcodis.com electronic components distributor

8. Ground the Power Supply Unit to a resistance of 100 Ω max. in the CPU Rack or Expansion Rack where the GP-IB Interface Unit is mounted.

The GP-IB connector's shell is internally connected to the Power Supply Unit's ground terminal (GR) through the CPU Rack or Expansion Rack. Consequently, the GP-IB cable's shield is grounded by grounding the Power Supply Unit's ground terminal (GR).

If the connected device is equipped with a ground terminal, we recommend grounding that terminal.

3-4 Setting the Unit Number

Set each Unit's unit number with the rotary switches on the front of the Unit. The unit numbers are used to identify the Special I/O Units in the PLC. The GP-IB Interface Unit's unit number may be set to any decimal number between 0 and 95. (The factory setting is 0.)

Use a small slotted screwdriver to turn the rotary switches and do not damage the switch while changing the setting.

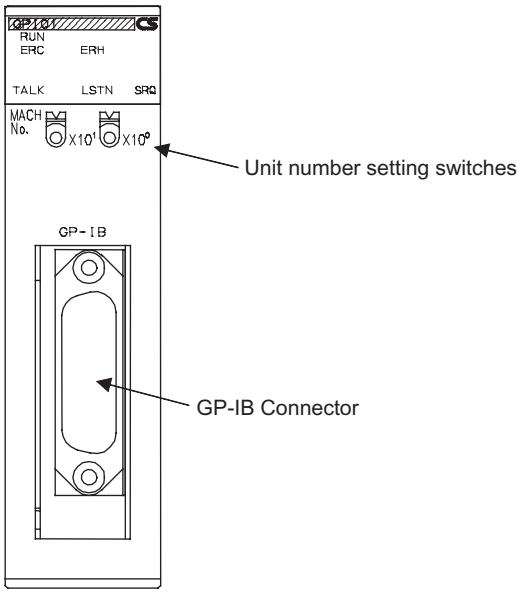

Note

1. Always turn OFF the PLC before changing the unit number setting.

   Create new I/O tables in the PLC after setting the unit number for the first time or changing the setting.

   Do not set the same unit number on more than one Special I/O Unit in a PLC. If the same number is set on two or more Special I/O Units, a Special I/O Unit setting error will occur and the GP-IB Interface Unit will not be recognized from the PLC.

2. The unit number is set to "0" at the factory.
   The unit number setting determines which DM area words are allocated to the Unit in the PLC.

Downloaded from Elcodis.com electronic components distributor

SECTION 4
Data Area and Buffer Memory Details

This section explains the functions of the GP-IB Interface Unit's buffer memory and the words allocated in the DM area and CIO area.

4-1 DM Area Allocations 20
4-1-1 Allocation of DM Area Words 20
4-1-2 DM Area Allocation Details 20
4-2 CIO Area Allocations 23
4-2-1 Allocation of CIO Area Words 23
4-3 Buffer Memory 27
4-3-1 Buffer Memory Details 27
4-4 Using IORD(222) and IOWR(223) 28
4-4-1 INTELLIGENT I/O READ: IORD(222) 28
4-4-2 INTELLIGENT I/O WRITE: IOWR(223) 28
4-4-3 Reading more than 128 Words 29

Downloaded from Elcodis.com electronic components distributor

4-1 DM Area Allocations

4-1-1 Allocation of DM Area Words

The GP-IB Interface Unit is allocated 100 words within the Special I/O Unit area (D20000 to D29599) of the CPU Unit's DM Area. The following table shows the actual word addresses allocated to each Unit based on the unit number (0 to 95) set on the front of the Unit.

Allocation of DM Area Words to Special I/O Units

Unit number	Allocated words
#0	D20000 to D20099
#1	D20100 to D20199
#2	D20200 to D20299
#3	D20300 to D20399
#4	D20400 to D20499
#5	D20500 to D20599
#6	D20600 to D20699
#7	D20700 to D20799
#8	D20800 to D20899
#9	D20900 to D20999
#10	D21000 to D21099
#11	D21100 to D21199
#12	D21200 to D21299
#13	D21300 to D21399
#14	D21400 to D21499
#15	D21500 to D21599

Unit number	Allocated words
#16	D21600 to D21699
#17	D21700 to D21799
#18	D21800 to D21899
:	:
:	:
:	:
:	:
:	:
:	:
:	:
:	:
:	:
:	:
:	:
:	:
:	:
#95	D29500 to D29599

A Unit's starting DM address can be calculated from the following formula:

Starting DM address = D20000 + (100 × unit number)

4-1-2 DM Area Allocation Details

The following table shows how the words allocated to the GP-IB Interface Unit are used.

m = D20000 + (100 × unit number)

Word	Bits	Setting	Setting range
m	00 to 07	Primary address	00 to 1E Hex (0 to 30 decimal) This is the GP-IB device address. (Set in hexadecimal.)
	08 to 15	Master/Slave mode setting	00 Hex: Slave mode 01 Hex: Master mode
m+1	00 to 07	Data storage order	00 Hex: Leftmost → rightmost 01 Hex: Rightmost → leftmost
	08 to 15	Enhanced BASIC commands	00 Hex: Function disabled 01 Hex: Function enabled (Setting valid in Slave mode only)
m+2	00 to 15	Timeout monitor time	0000 Hex: Default setting of 10 s 0001 to FFFF Hex: 1 to 65,535 s (Set in hexadecimal.)

Downloaded from Elcodis.com electronic components distributor

Word	Bits	Setting	Setting range
m+3	00 to 07	Transmission delimiter specification	When bits 12 to 15 of m+3 are set to 0 Hex: 00 Hex: CR + LF 01 Hex: CR 02 Hex: LF Any other setting: No delimiter When bits 12 to 15 of m+3 are set to F Hex: Set the desired delimiter code in bits 00 to 07.
	08 to 11	EOI specification	0 Hex: Send EOI. Any other setting: Do not send EOI.
	12 to 15	Transmission delimiter selection	0 Hex: Standard code (Select delimiter in bits 00 to 07.) F Hex: User-set code (Set delimiter code in bits 00 to 07.)
m+4	00 to 07	Reception delimiter specification	When bits 12 to 15 of m+4 are set to 0 Hex: 00 Hex: CR + LF 01 Hex: CR 02 Hex: LF Any other setting: No delimiter When bits 12 to 15 of m+4 are set to F Hex: Set the desired delimiter code in bits 00 to 07.
	08 to 11	EOI specification	0 Hex: Complete reception at EOI. Any other setting: Ignore EOI.
	12 to 15	Reception delimiter selection	0 Hex: Standard code (Select delimiter in bits 00 to 07.) F Hex: User-set code (Set delimiter code in bits 00 to 07.)
m+5	00 to 15	Number of bytes to receive	0000 Hex: Default setting of 512 bytes 0001 to 0200 Hex: 1 to 512 bytes Reception will be completed when the specified number of bytes have been received. (Set in hexadecimal.)
m+6	00 to 07	SRQ external interrupt task number	00 to FF Hex (Setting valid in Master mode only) Set the CPU Unit's external interrupt task number in hexadecimal.
	08 to 15	SRQ external interrupt task startup setting	0 Hex: Do not start the external interrupt task. 1 Hex: Start the external interrupt task. (Setting valid in Master mode only)
m+7 : m+99	Reserved.		

Note

1. The settings in the allocated DM area words are read when the GP-IB Interface Unit starts. If the settings in the allocated DM area words have been changed, the new settings must be enabled by restarting the Unit or turning the PLC OFF and ON again.
2. Do not use the reserved words (m+7 through m+99) in the program.
3. The timeout monitor time, reception delimiter settings, and transmission delimiter settings can be set independently in buffer memory when there is a send request or read request. The settings in the buffer memory will override the allocated DM settings. Refer to *4-3 Buffer Memory* for details.

Primary Address (Bits 00 to 07 of m)

Sets the GP-IB Interface Unit's device address. Set the device address in hexadecimal between 00 and 1E (0 to 30 decimal.)

Master/Slave Mode (Bits 08 to 15 of m)

Specifies whether the Unit will be used in Master mode or Slave mode. Set this byte to 01 Hex if the GP-IB Interface Unit is being used in Master mode (with the Controller functions.)

Downloaded from Elcodis.com electronic components distributor

Data Storage Order (Bits 00 to 07 of m+1)

Specifies the order in which bytes are transferred in the GP-IB system.

- Sending: Data in the buffer memory is sent in the specified order.
- Receiving: Received data is stored in buffer memory in the specified order.

The byte order can be set to either leftmost byte first (leftmost → rightmost) or rightmost byte first (rightmost → leftmost).

Byte Order when Sending

The following tables show the order in which data stored in the buffer memory's transmission data area is sent to the GP-IB bus.

- Leftmost byte first (leftmost → rightmost)

Word in PLC	Bits 8 to 15	Bits 0 to 7
K	Byte 1	Byte 2
K+1	Byte 3	Byte 4
:	:	:

- Rightmost byte first (rightmost → leftmost)

Word in PLC	Bits 8 to 15	Bits 0 to 7
K	Byte 2	Byte 1
K+1	Byte 4	Byte 3
:	:	:

Byte Order when Receiving

The following tables show the order in which received data is stored in the buffer memory's reception data area. If an odd number of bytes is received, the last byte will be set to 00 Hex automatically.

- Leftmost byte first (leftmost → rightmost)

Word in PLC	Bits 8 to 15	Bits 0 to 7
K	Byte 1	Byte 2
K+1	Byte 3	Byte 4
:	:	:

- Rightmost byte first (rightmost → leftmost)

Word in PLC	Bits 8 to 15	Bits 0 to 7
K	Byte 2	Byte 1
K+1	Byte 4	Byte 3
:	:	:

Refer to *4-3 Buffer Memory* for details on buffer memory.

Enhanced BASIC Commands Setting (Bits 08 to 15 of m+1)

Set this byte to 01 Hex when enhanced BASIC commands are being used in GP-IB communications. This setting is valid in Slave mode only.

Timeout Monitor Time (m+2)

Sets the monitoring time for timeout errors during data transmission and data reception. Set the monitor time (seconds) in hexadecimal.

The default setting of 0000 Hex specifies a timeout monitor time of 10 s.

Transmission Delimiter Specification (m+3)

Specifies the delimiter that will be attached to the end of the data string when the Unit is transmitting data. Bits 08 to 11 set the EOI signal output.

Example settings	Function
0000 Hex	Attach CR + LF and output EOI.
0F01 Hex	Attach CR. (Do not output EOI.)

Downloaded from Elcodis.com electronic components distributor

Example settings	Function
00FF Hex	Do not attach a delimiter, just output EOI.
F003 Hex	Attach the user-set code (03 Hex) and output EOI.

Reception Delimiter Specification (m+4)

Specifies the delimiter that indicates the end of the data string when the Unit is receiving data. Bits 08 to 11 specify whether or not the EOI signal is being used to complete reception.

Example settings	Function
0000 Hex	Reception is completed when CR + LF is received and the EOI signal is detected.
0F01 Hex	Reception is completed when CR is received.
00FF Hex	Reception is completed when the EOI signal is detected.
F003 Hex	Reception is completed when the user-set code (03 Hex) is received.

Number of Bytes to Receive (m+5)

Sets the number of bytes in a complete reception. The setting range is 0001 to 0200 Hex (1 to 512 bytes.) The “number of bytes to receive” setting is effective regardless of the reception delimiter specification set in m+4.

Note The GP-IB Interface Unit will complete reception when any of the following conditions has been met.

- The number of bytes specified in m+5 (number of bytes to receive) is received.
- The EOI signal is detected.
- The specified delimiter code is received.

These conditions are processed in the order listed above. For example, reception will be completed immediately if the specified number of bytes is received before the EOI signal is detected.

SRQ External Interrupt Task Settings (m+6)

These settings determine which external interrupt task (if any) is started in the CS-series CPU Unit when the GP-IB Interface Unit is operating in Master mode and an SRQ message is received. These settings are effective in Master mode only.

Note

1. The GP-IB Interface Unit must be mounted in the CPU Rack in order to start an external interrupt task when it receives an SRQ message. The GP-IB Interface Unit cannot start an external interrupt task if it is mounted in an Expansion Rack.
2. An external interrupt task cannot be started unless the user program is being executed.
3. Refer to the *CS/CJ Series Programmable Controllers Programming Manual* (W394) for more details on external interrupt tasks.

4-2 CIO Area Allocations

4-2-1 Allocation of CIO Area Words

The GP-IB Interface Unit is allocated 10 words within the Special I/O Unit area (CIO 2000 to CIO 2959) of the CPU Unit’s CIO Area. The following table shows the actual word addresses allocated to each Unit based on the unit number (0 to 95) set on the front of the Unit.

Downloaded from Elcodis.com electronic components distributor

Allocation of CIO Area Words to Special I/O Units

Unit number	Allocated words
#0	CIO 2000 to CIO 2009
#1	CIO 2010 to CIO 2019
#2	CIO 2020 to CIO 2029
#3	CIO 2030 to CIO 2039
#4	CIO 2040 to CIO 2049
#5	CIO 2050 to CIO 2059
#6	CIO 2060 to CIO 2069
#7	CIO 2070 to CIO 2079
#8	CIO 2080 to CIO 2089
#9	CIO 2090 to CIO 2099
#10	CIO 2100 to CIO 2109
#11	CIO 2110 to CIO 2119
#12	CIO 2120 to CIO 2129
#13	CIO 2130 to CIO 2139
#14	CIO 2140 to CIO 2149
#15	CIO 2150 to CIO 2159

Unit number	Allocated words
#16	CIO 2160 to CIO 2169
#17	CIO 2170 to CIO 2179
#18	CIO 2180 to CIO 2189
:	:
:	:
:	:
:	:
:	:
:	:
:	:
:	:
:	:
:	:
:	:
:	:
:	:
#95	CIO 2950 to CIO 2959

A Unit's starting CIO address can be calculated from the following formula:

Starting CIO address = CIO 2000 + (10 × unit number)

CIO Area Allocation Details (Output)

The following table shows the function of the 5 output words.

n = CIO 2000 + (10 × unit number)

Word	Bits	Name		Function
n	00	Send Interface Message Request Bit		0: No request 0 → 1 (Up-differentiation): Request to send interface message (Used in Master mode only.) Note: This bit is not reset to 0 automatically.
	01	Send Data Request Bit		0: No request 0 → 1 (Up-differentiation): Request to send data Note: This bit is not reset to 0 automatically.
	02	Read Data Request Bit		0: No request 0 → 1 (Up-differentiation): Request to receive data (Used in Master mode only.) Note: This bit is not reset to 0 automatically.
	03 to 07	Reserved		---
	08 to 13	Status byte	Polling Status	When serial polling is being used, the contents of bits 08 to 15 are sent as the status byte.
	14		SRQ Request Bit	0: An SRQ Message is not sent to Controller. 0 → 1 (Up-differentiation): An SRQ Message is sent to Controller. (Used in Slave mode only.) Note: This bit is not reset to 0 automatically.
	15		Polling Status	When serial polling is received, the contents of bits 08 to 15 are sent as the status byte.
n+1 to n+4	00 to 15	Reserved		---

Downloaded from Elcodis.com electronic components distributor

Note

1. The Send Interface Message Request Bit, Send Data Request Bit, Read Data Request Bit, and SRQ Request Bit are effective when the bit goes from OFF to ON.
2. The Send Interface Message Request Bit, Send Data Request Bit, Read Data Request Bit, and SRQ Request Bit are not turned OFF automatically. Turn the bit OFF from the ladder program after confirming that the request was completed.
3. The Polling Status bits are valid in Slave mode only. If the GP-IB Interface Unit receives a Serial Poll from the Controller, the Unit will return bits 08 to 15 of n as the status byte.

CIO Area Allocation Details (Input)

The following table shows the function of the 5 input words.
n = CIO 2000 + (10 × unit number)

Word	Bits	Name	Function
n+5	00	Interface Message Send Completed Flag	0: Interface message transmission has not been completed or there was no request. 1: Interface message transmission has been completed.
	01	Data Send Completed Flag	0: Data transmission has not been completed or there was no request. 1: Data transmission has been completed.
	02	Data Read Completed Flag	0: Data reception has not been completed or there was no request. 1: Data reception has been completed.
	03 to 15	Reserved	---
n+6	00 to 15	Number of data bytes received	Indicates the number of bytes of data received through the GP-IB system. The number is expressed in hexadecimal. (The content of n+6 is valid only when the Data Read Completed Flag is ON.)

Downloaded from Elcodis.com electronic components distributor

Word	Bits	Name	Function
n+7	00 to 05	Reserved	---
	06	ID0/OD0 Command Received Flag	0: An ID0 or OD0 command was not received. (Valid in Slave mode only) 1: An ID0 or OD0 command was received. (Transferred data is converted from ASCII to binary.)
	07	Parameter Error Flag	0: There isn't an error in the specified parameters. 1: There is an error in the specified parameters.
	08	GP-IB Error Flag	0: A GP-IB error has not occurred. 1: A GP-IB error has occurred.
	09	Timeout Error Flag	0: A timeout error has not occurred. 1: A timeout error occurred during data transmission or reception.
	10	Command Error Flag	0: A command error has not occurred. 1: A command error has occurred. (Valid in Slave mode only) (A command error is an Enhanced BASIC command format error or ASCII-binary conversion error.)
	11	Reserved	---
	12	SRQ Received Flag	Unit operating in Master mode: 0: An SRQ message has not been received or the serial poll status data has been stored. 1: An SRQ message has been received.
			Unit operating in Slave mode: 0: An SRQ message has not been sent or the serial poll status data has been sent. 1: An SRQ request has been received.
	13	Talker Specification Received Flag	0: The Unit is not operating as a Talker. 1: The Unit is operating as a Talker. (Valid in Slave mode only)
	14	Listener Specification Received Flag	0: The Unit is not operating as a Listener. 1: The Unit is operating as a Listener. (Valid in Slave mode only)
	15	Controller Function Operating Flag	0: The Unit is operating in Slave mode. 1: The Unit is operating in Master mode.
n+8 to n+9	00 to 15	Reserved	---

Downloaded from Elcodis.com electronic components distributor

4-3 Buffer Memory

4-3-1 Buffer Memory Details

The buffer memory is within the GP-IB Interface Unit, but it can be accessed from the ladder program with the INTELLIGENT I/O READ and INTELLIGENT I/O WRITE instructions (IORD(222) and IOWR(223).) The following table shows the functions of addresses in buffer memory.

Category	Address	Function	
		Name	Description
Functions related to interface messages	0000	Interface message number	0001 Hex: Device Trigger 0002 Hex: Set Remote Status 0003 Hex: Device Clear 0004 Hex: Set Local Status 0005 Hex: Set Local Lockout 0006 Hex: Serial Poll 0007 Hex: Interface Clear
	0001	Number of peer devices	0000 to 000D Hex (0 to 14 devices) (If the number of peer devices is set to 0, do not specify addresses.)
	0002 to 000F	Peer device addresses	Set the device addresses for the specified number of peer devices. (Set the first device address in 0002, the second in 0003, etc.) Each device address must be unique and between 0000 and 001E Hex (0 to 30.)
	0010 to 001D	Serial polling status	The results of serial polling are stored in the leftmost/rightmost bytes of these words in the specified address order.
	001E to 001F	Reserved	Reserved area (See note 1.)
Functions related to data transmission	0020	Individual transmission parameters	Delimiter specification (See notes 2 and 3.)
	0021		Timeout monitor time (See notes 2 and 3.)
	0022	Transmission data buffer	Number of receiving device addresses (Used in Master mode only.)
	0023 to 0030		Receiving device addresses (Used in Master mode only.) Set the device addresses for the specified number of receiving devices. (Set the first device address in 0023, the second in 0024, etc.)
	0031		Number of bytes of transmission data (Set in hexadecimal.)
	0032 to 0131		Transmission data (512 bytes max.) (Do not include the delimiter in the transmission data.)
	0132 to 013F	Reserved	Reserved area (See note 1.)
Functions related to data reception	0140	Individual reception parameters	Delimiter specification (See notes 2 and 3.)
	0141		Timeout monitor time (See notes 2 and 3.)
	0142		Number of bytes to receive (See notes 2 and 3.)
	0143	Reception data buffer	Transmitting device address (Used in Master mode only.)
	0144		Number of receiving device addresses (Used in Master mode only.)
	0145 to 0152		Receiving device addresses (Used in Master mode only.) Set the device addresses for the specified number of receiving devices. (Set the first device address in 0145, the second in 0146, etc.)
	0153		Number of bytes of reception data (Set in hexadecimal.)
	0154 to 0253		Reception data (512 bytes max.) (The delimiter is not included in the reception data.)

Downloaded from Elcodis.com electronic components distributor

Note

1. Do not access (read or write) the reserved areas.
2. When the power is turned ON, the parameter settings in the allocated DM area words are used to set the individual transmission parameters (delimiter specification and timeout monitor time) and individual reception parameters (delimiter specification, timeout monitor time, and number of bytes to receive.)
3. When fixed settings are being used for all sending and receiving devices, set the appropriate parameters in the allocated DM area words. It is not necessary to set the individual transmission parameters and individual reception parameters in the buffer memory.

4-4 Using IORD(222) and IOWR(223)

Data in the buffer memory can be read and written from the ladder program by executing the INTELLIGENT I/O READ and INTELLIGENT I/O WRITE instructions (IORD(222) and IOWR(223).) Up to 128 words (256 bytes) of data can be transferred in one instruction execution.

4-4-1 INTELLIGENT I/O READ: IORD(222)

@IORD(222)	
C	C: Starting read address in buffer memory (0000 to 0253 Hex) (See note.)
W	W: Unit number of source device (0000 to 005F Hex) W+1: Number of words to transfer (0001 to 0080 Hex)
D	D: First destination word address

Note Bit 15 of C is used as the Read Continuation Bit. When more than 128 words of data are being read by multiple IORD(222) instructions, turn ON bit 15 of C in all of the IORD(222) instructions except the last one. Refer to *4-4-3 Reading more than 128 Words* for more details.

4-4-2 INTELLIGENT I/O WRITE: IOWR(223)

@IOWR(223)	
C	C: Starting write address in buffer memory (0000 to 0253 Hex)
S	S: First source word address
W	W: Unit number of destination device (0000 to 005F Hex) W+1: Number of words to transfer (0001 to 0080 Hex)

Note Refer to the *CS/CJ Series Programmable Controllers Programming Manual* (W394) for more details on IORD(222) and IOWR(223).

Downloaded from Elcodis.com electronic components distributor

4-4-3 Reading more than 128 Words

The Data Read Completed Flag in the allocated CIO area words will be turned OFF when IORD(222) has read the data from the GP-IB Interface Unit's buffer memory. If more than 128 words are being read, it will be necessary to execute more than one IORD(222) instruction. It is easy to control the read operation from the ladder program with the Read Continuation Bit because the CIO area's Data Read Completed Flag can be turned OFF only after the last IORD(222) instruction has read all of the data from the Unit's buffer memory.

Read Continuation Flag

@IORD(222)	
C	C: Starting read address in buffer memory (0000 to 0253 Hex) with Read Continuation Bit in bit 15 (See note.)
W	
D	

Note Bit 15 of C functions as the Read Continuation Bit.

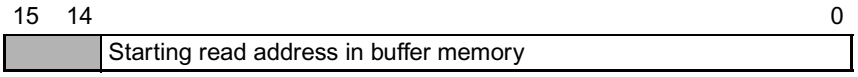

Bit 15 = 0: The last batch of data is being read.
Bit 15 = 1: There is data remaining to be read.

Example 1
When there are 128 or fewer words to read, execute IORD(222) with the Read Continuation Bit OFF.

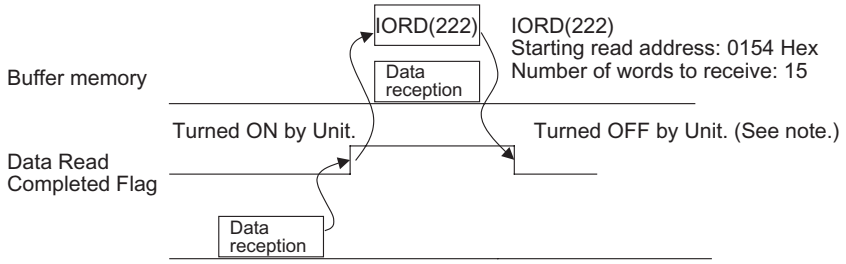

Example: Receiving 30 bytes (15 words) of data

Example 2
When there are more than 128 words to read, execute IORD(222) with the Read Continuation Bit ON.

Downloaded from Elcodis.com electronic components distributor

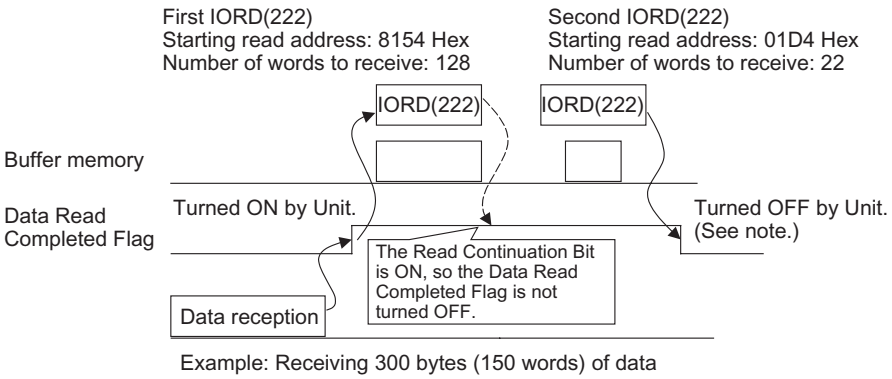

Example: Receiving 300 bytes (150 words) of data

Note

1. If IORD(222) is executed with the Read Continuation Bit OFF, the Data Read Completed Flag will be turned OFF even if all of the received data has not been read from the Unit yet.
2. Even if IORD(222) is mistakenly executed with the Read Continuation Bit OFF, the received data can still be read properly.

Downloaded from Elcodis.com electronic components distributor

SECTION 5
Communicating in the GP-IB System

This section explains the GP-IB Interface Unit's communications functions.

5-1 Master Mode Functions 32
5-1-1 Sending Interface Messages 32
5-1-2 Sending Data in Master Mode 32
5-1-3 Receiving Data in Master Mode 34
5-1-4 Receiving SRQ Messages in Master Mode 36
5-2 Slave Mode Functions 36
5-2-1 Sending Data in Slave Mode 36
5-2-2 Receiving Data in Slave Mode 38
5-2-3 Sending SRQ Messages in Slave Mode (Interrupt Request) 40
5-2-4 Executing Enhanced BASIC Commands 40

Downloaded from Elcodis.com electronic components distributor

5-1 Master Mode Functions

5-1-1 Sending Interface Messages

Send interface messages to control other devices in the GP-IB system. Use the following procedure to send interface messages.

1,2,3...

1. Write the following 3 settings into buffer memory from the ladder program.
   - Interface message number
   - Number of peer devices
   - Peer device addresses
2. Turn ON (OFF → ON) the Send Interface Message Request Bit (bit 00 of n). When the interface message has been sent, the Interface Message Send Completed Flag (bit 00 of n+5) will be turned ON.

Use the INTELLIGENT I/O READ and INTELLIGENT I/O WRITE instructions (IORD(222) and IOWR(223)) to read and write data in the Unit's buffer memory.

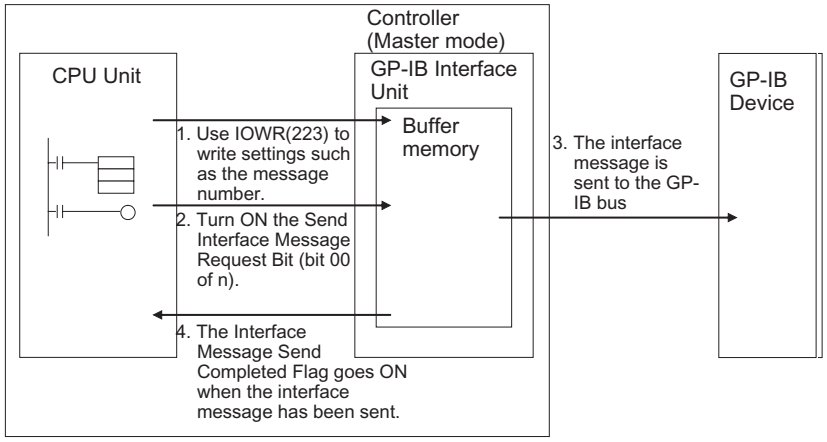

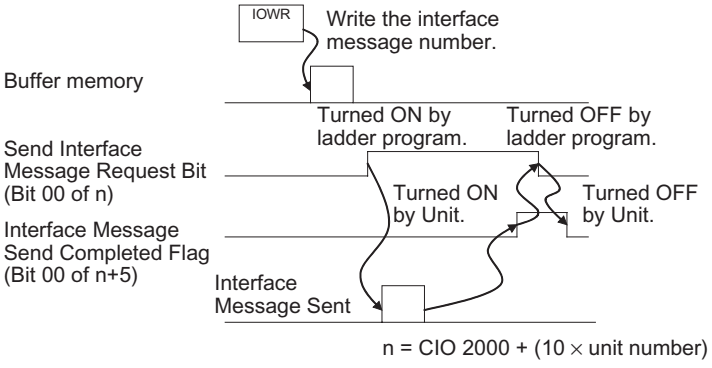

5-1-2 Sending Data in Master Mode

Use the following procedure to send data in Master mode.

1,2,3...

1. Write the following 2 settings into buffer memory from the ladder program. (It isn't necessary to make these settings if they are the same as the settings in the allocated DM area words.)
   - Transmission delimiter specification
   - Timeout monitor time

Downloaded from Elcodis.com electronic components distributor

2. Write the following 4 settings into buffer memory from the ladder program.
   - Receiving device addresses
   - Number of receiving device addresses
   - Number of bytes of transmission data
   - Transmission data
3. If the Data Send Completed Flag (bit 01 of n+5 in the allocated CIO area words) is OFF, turn ON (OFF → ON) the Send Data Request Bit (bit 01 of n).

   At this point, the TALK Indicator will be lit.
4. When the data has been sent, the TALK Indicator will go OFF and the Data Send Completed Flag (bit 01 of n+5) will go ON.

   If the Data Send Completed Flag (bit 01 of n+5) is ON, the Send Data Request Bit (bit 01 of n) will be turned OFF in the user program.

Use the INTELLIGENT I/O READ and INTELLIGENT I/O WRITE instructions (IORD(222) and IOWR(223)) to read and write data in the Unit's buffer memory.

Note

1. The data written to the transmission data area is not converted or checked for errors. If a delimiter code is included within the data, the data string will be transmitted as-is and the specified delimiter code will be attached to the end of the data string after the specified number of bytes have been transmitted.
2. The individual transmission parameters (transmission delimiter specification and timeout monitor time) will be overwritten with the settings in the allocated DM area words when the power is turned ON.
3. When the same settings are being used for all sending and receiving devices, set the appropriate parameters in the allocated DM area words. It is not necessary to set individual transmission parameters and individual reception parameters in the buffer memory.
4. The "number of bytes of transmission data" setting does not include the transmission delimiter.
5. The GP-IB Interface Unit automatically attaches the transmission delimiter to the data string. It isn't necessary to include the delimiter at the end of the transmission data written to buffer memory.

Downloaded from Elcodis.com electronic components distributor

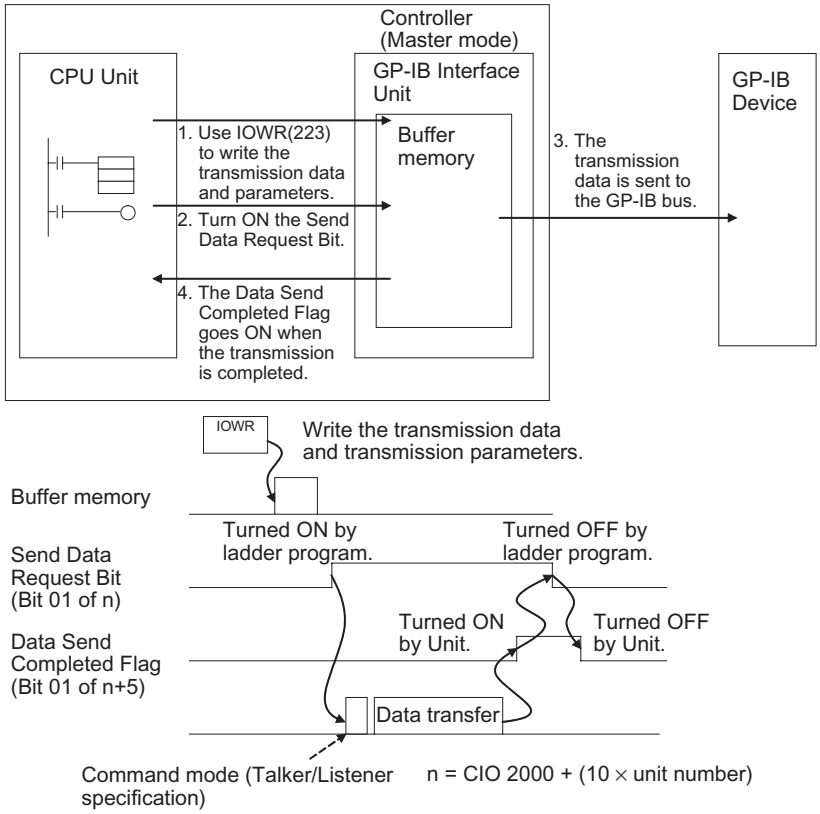

5-1-3 Receiving Data in Master Mode

Use the following procedure to receive data in Master mode.

1,2,3...

1. Write the following 3 settings into buffer memory from the ladder program. (It isn't necessary to make these settings if they are the same as the settings in the allocated DM area words.)
   - Reception delimiter specification
   - Timeout monitor time
   - Number of bytes to receive
2. Write the following 3 settings into buffer memory from the ladder program.
   - Transmitting device address
   - Number of receiving device addresses
   - Receiving device addresses
     (Include the GP-IB Interface Unit's primary address.)
3. If the Data Read Completed Flag (bit 02 of n+5) is OFF, turn ON (OFF → ON) the Read Data Request Bit (bit 02 of n).

   At this point, the LSTN Indicator will be lit.
4. When the data has been received, the LSTN Indicator will go OFF and the Data Read Completed Flag (bit 02 of n+5) will go ON.

   If the Data Read Completed Flag (bit 02 of n+5) is ON, the Read Data Request Bit (bit 02 of n) will be turned OFF in the user program.

Use the INTELLIGENT I/O READ and INTELLIGENT I/O WRITE instructions (IORD(222) and IOWR(223)) to read and write data in the Unit's buffer memory.

Downloaded from Elcodis.com electronic components distributor

Note

1. The individual reception parameters (reception delimiter specification, timeout monitor time, and number of bytes to receive) will be overwritten with the settings in the allocated DM area words when the power is turned ON.
2. When the same settings are being used for all sending and receiving devices, set the appropriate parameters in the allocated DM area words. It is not necessary to set individual transmission parameters and individual reception parameters in the buffer memory.
3. The “number of bytes to receive” setting does not include the reception delimiter.
4. The reception delimiter is not written to the buffer memory.

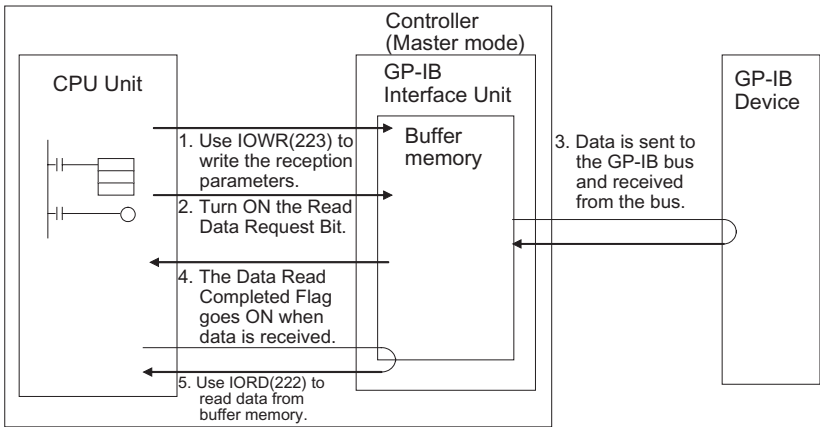

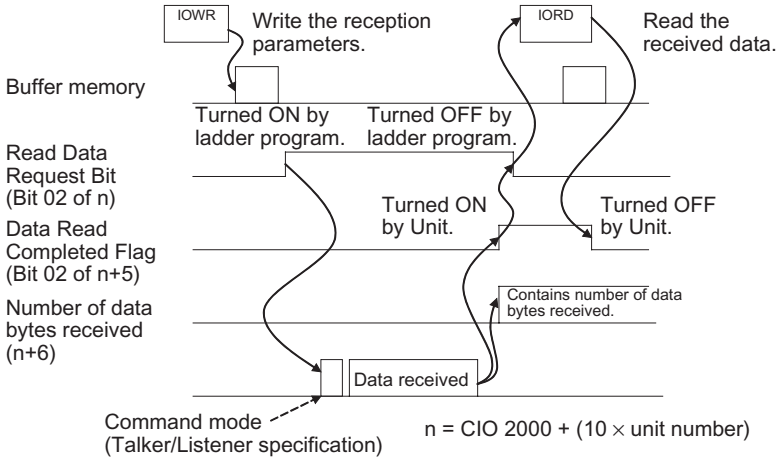

Note

1. If the Unit receives new data from the system before the existing data has been read with IORD(222), the newly received data will be discarded.
2. Data reception will be completed in the following cases:
   - The specified delimiter is received
   - The number of bytes received exceeds the “number of bytes to receive” setting

Downloaded from Elcodis.com electronic components distributor

5-1-4 Receiving SRQ Messages in Master Mode

If an SRQ message is received from another device while the GP-IB Interface Unit is operating in Master mode, the SRQ Received Flag (bit 12 of n+7) will be turned ON. The status byte of the device that sent the SRQ message can be read by performing serial polling.

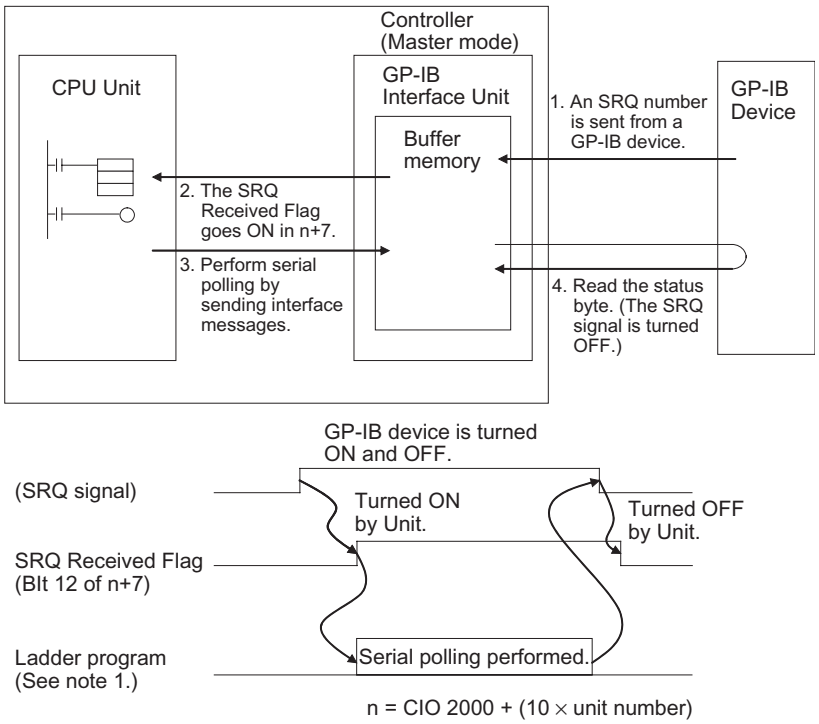

Note

1. The allocated DM settings can be set to start an interrupt program when an SRQ request is received.
2. I/O REFRESH (IORF(097)) can be used in an interrupt task. In this case, always disable cyclic refreshing for the GP-IB Interface Unit with the PLC Setup's Special I/O Unit cyclic refresh setting.

5-2 Slave Mode Functions

5-2-1 Sending Data in Slave Mode

When the GP-IB Interface Unit is operating in Slave mode and there is a send request sent from the system Controller to the Unit, the Talker Specification Received Flag (bit 13 of n+7) will be turned ON.

Use the following procedure to send data in Slave mode.

1,2,3...

1. Write the following 2 settings into buffer memory from the ladder program. (It isn't necessary to make these settings if they are the same as the settings in the allocated DM area words.)
   - Transmission delimiter specification
   - Timeout monitor time
2. Write the following 2 settings into buffer memory from the ladder program.
   - Number of bytes of transmission data
   - Transmission data

Downloaded from Elcodis.com electronic components distributor

3. If the Data Send Completed Flag (bit 01 of n+5 in the allocated CIO area words) is OFF, turn ON (OFF → ON) the Send Data Request Bit (bit 01 of n).

   At this point, the TALK Indicator will be lit.

4. When the data has been sent, the TALK Indicator will go OFF and the Data Send Completed Flag (bit 01 of n+5) will go ON.

   If the Data Send Completed Flag (bit 01 of n+5) is ON, the Send Data Request Bit (bit 01 of n) will be turned OFF in the user program.

Use the INTELLIGENT I/O READ and INTELLIGENT I/O WRITE instructions (IORD(222) and IOWR(223)) to read and write data in the Unit's buffer memory.

Note

1. The data written to the transmission data area is not converted or checked for errors. If a delimiter code is included within the data, the data string will be transmitted as-is and the specified delimiter code will be attached to the end of the data string after the specified number of bytes have been transmitted.
2. The individual transmission parameters (transmission delimiter specification and timeout monitor time) will be overwritten with the settings in the allocated DM area words when the power is turned ON.
3. When the same settings are being used for all sending and receiving devices, set the appropriate parameters in the allocated DM area words. It is not necessary to set individual transmission parameters and individual reception parameters in the buffer memory.
4. The "number of bytes of transmission data" setting does not include the transmission delimiter.
5. The GP-IB Interface Unit automatically attaches the transmission delimiter to the data string. It isn't necessary to include the delimiter at the end of the transmission data written to buffer memory.

Downloaded from Elcodis.com electronic components distributor

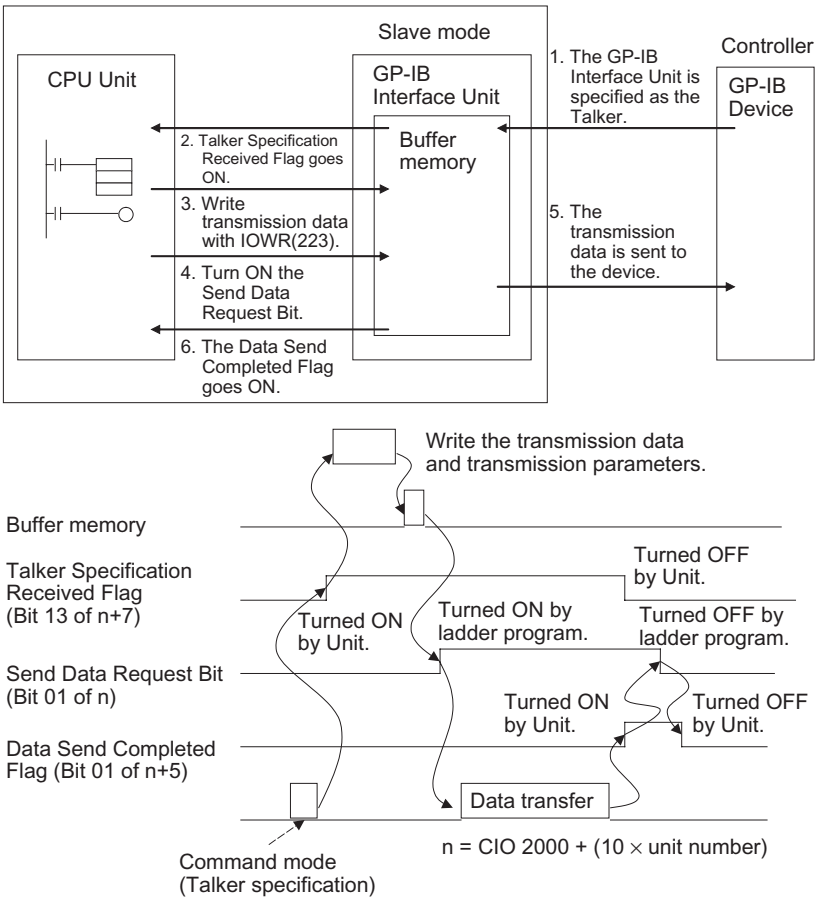

5-2-2 Receiving Data in Slave Mode

When the GP-IB Interface Unit is operating in Slave mode and there is a read request sent from the system Controller to the Unit, the Unit will automatically start receiving data.

Use the following procedure to receive data in Slave mode.

1,2,3...

1. Before receiving data, write the following 3 settings into buffer memory from the ladder program. (It isn't necessary to make these settings if they are the same as the settings in the allocated DM area words.)
   - Reception delimiter specification
   - Timeout monitor time
   - Number of bytes to receive
2. Data received from the other device will be stored in buffer memory. At this point, the LSTN Indicator will be lit.
3. When the data has been received, the Data Read Completed Flag (bit 02 of n+5) will go ON and the number of bytes received will be recorded in n+6.
4. Read the data in the buffer memory from the ladder program.

Use the INTELLIGENT I/O READ and INTELLIGENT I/O WRITE instructions (IORD(222) and IOWR(223)) to read and write data in the Unit's buffer memory.

Downloaded from Elcodis.com electronic components distributor

Note

1. The individual reception parameters (reception delimiter specification, timeout monitor time, and number of bytes to receive) will be overwritten with the settings in the allocated DM area words when the power is turned ON.
2. When the same settings are being used for all sending and receiving devices, set the appropriate parameters in the allocated DM area words. It is not necessary to set individual transmission parameters and individual reception parameters in the buffer memory.
3. The "number of bytes to receive" setting does not include the reception delimiter.
4. The reception delimiter is not written to the buffer memory.

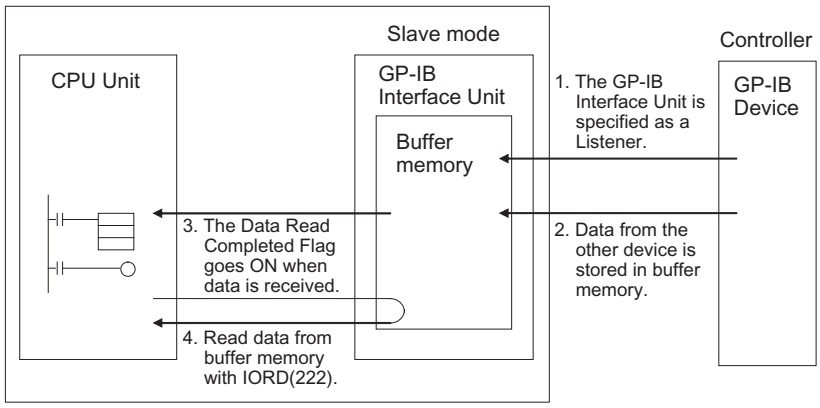

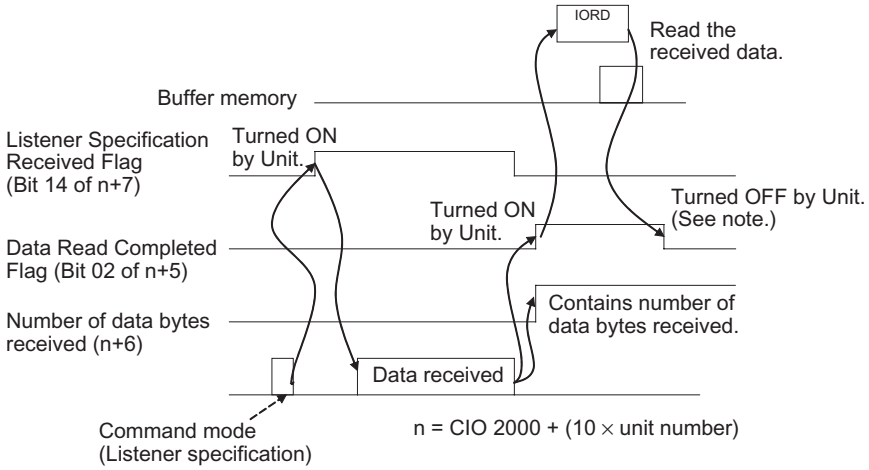

Note When the Unit is operating in Slave mode, data is received into buffer memory automatically when the Unit is specified as a Listener. The Read Data Request Bit is not needed.

Also, it is not necessary to check the Listener Specification Received Flag from the ladder program. The Data Read Completed Flag will be turned ON when all of the data has been received in the buffer memory, so read the data with IORD(222) when that flag goes ON.

Downloaded from Elcodis.com electronic components distributor

5-2-3 Sending SRQ Messages in Slave Mode (Interrupt Request)

When the GP-IB Interface Unit is operating in Slave mode, it can send an SRQ message to the system Controller. To send an SRQ message, turn ON (OFF → ON) the SRQ Request Bit (bit 14 of n).

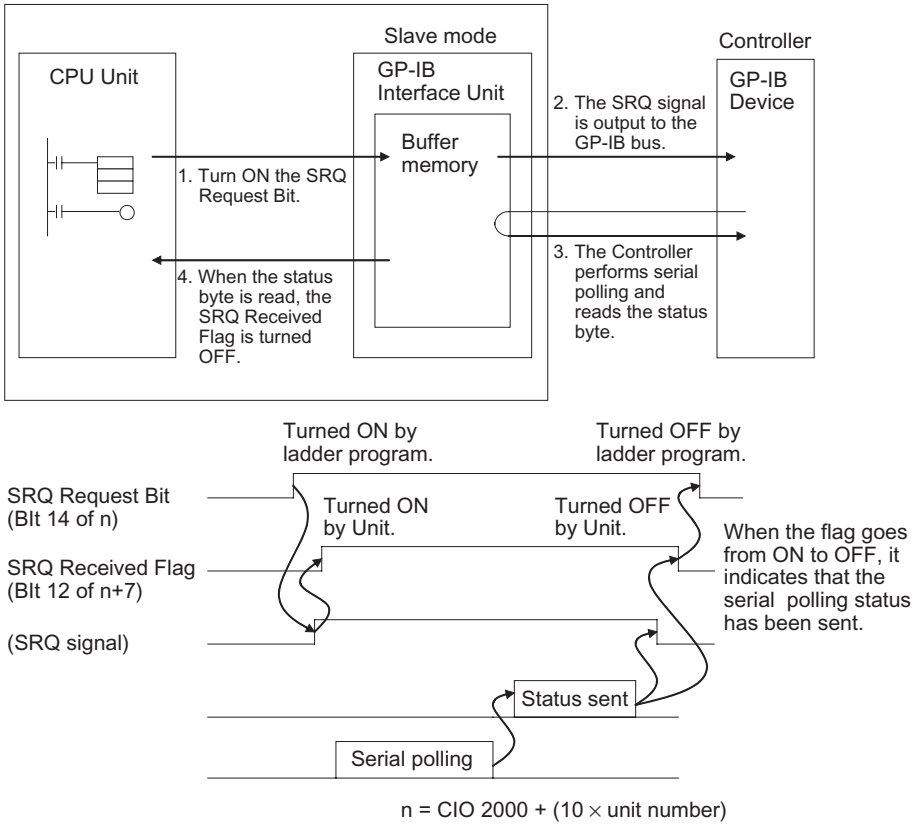

Note When serial polling is performed because an SRQ message has been sent to the GP-IB bus, the status byte (bits 08 to 15 of n) will be sent to the GP-IB bus. If the GP-IB Interface Unit is polled and did not send the SRQ message, the status byte will be output with the 7th (bit 14 of n) set to 0.

5-2-4 Executing Enhanced BASIC Commands

Enhanced BASIC commands are special commands supported by the GP-IB Interface Unit. When the enhanced BASIC commands are being used, enable the enhanced BASIC commands function in the allocated DM area words by setting the corresponding byte (bits 08 to 15 of m+1) to 01 Hex.

Note

1. When the Unit receives data from the GP-IB bus, it determines whether or not the data is an enhanced BASIC command. A command error will occur if the enhanced basic commands function is enabled in the allocated DM area words but the data that was received is not an enhanced BASIC command.
2. Enhanced BASIC commands are not treated as reception data, so the commands are not stored in the buffer and not included in the “number of bytes of reception data.”

Downloaded from Elcodis.com electronic components distributor

Executable Enhanced BASIC Commands

Command	Name	Description
OS	Output Status	Sends the Unit's internal status to the host.
IN	Initialize	Returns the Unit to its initial settings.
OD0	Output Data (ASCII)	After executing this command, the Unit converts internal data to ASCII and sends the data to the host.
OD1	Output Data 1 (Binary)	After executing this command, the Unit sends internal data to the host in binary format.
ID0	Input Data 0 (ASCII)	ASCII data from the host is converted to binary format and read into the Unit.
ID1	Input Data 1 (Binary)	Data from the host is read into the Unit in binary format.

OS (Output Status)

Sends the Unit's internal status (1 byte) to the host computer. The following diagram shows the functions of the signals in the status byte.

---	---	BIN	---	P.ERR	C.ERR	T.ERR	G.ERR

BIN: When this bit is "1", it indicates that the transmission data is in binary format.

P.ERR: When this bit is "1", it indicates that a parameter error has occurred.

C.ERR: When this bit is "1", it indicates that a command error has occurred.

T.ERR: When this bit is "1", it indicates that a timeout error has occurred.

G.ERR: When this bit is "1", it indicates that a GP-IB interface error has occurred.

---: Reserved (variable signal status)

IN (Initialize)

This command returns the GP-IB Interface Unit to its initial status. Use this command to initialize just the GP-IB Interface Unit.

ID0 (Input Data: ASCII)

When an ID0 command is received from the host computer, the rest of the received data is treated as ASCII data. The data is converted to binary format, and stored in the reception data area.

ID1 (Input Data: Binary)

When an ID1 command is received from the host computer, the rest of the received data is treated as binary data and stored unchanged in the reception data area.

OD0 (Output Data: ASCII)

When an OD0 command is received from the host computer, the transmission data format is set to ASCII. The data in the transmission data area is converted to ASCII and sent. The Unit will continue to convert output data to ASCII before sending it unless an OD1 command is received.

OD1 (Output Data: Binary)

When an OD1 command is received from the host computer, the transmission data format is set to binary. The data in the transmission data area is sent unchanged in binary format. The Unit will continue to send data in binary format unless an OD0 command is received.

Downloaded from Elcodis.com electronic components distributor

Downloaded from Elcodis.com electronic components distributor

SECTION 6
Programming Examples

This section provides programming examples that demonstrate how to control the GP-IB system and transfer data from the ladder program.

6-1 Master Mode Program Examples 44
6-1-1 Device Trigger 44
6-1-2 Set Remote Status 46
6-1-3 Device Clear 47
6-1-4 Set Local Status 48
6-1-5 Set Local Lockout 49
6-1-6 Serial Poll 50
6-1-7 Interface Clear 52
6-1-8 Sending Data 53
6-1-9 Receiving Data 55
6-2 Slave Mode Program Examples 56
6-2-1 Sending Data 57
6-2-2 Receiving Data 58
6-2-3 Service Request 59
6-3 Enhanced BASIC Command Program Example 59

Downloaded from Elcodis.com electronic components distributor

6-1 Master Mode Program Examples

The programming examples in this section use the following system configuration.

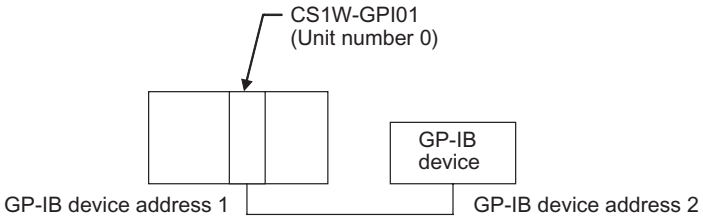

In this example, the GP-IB Interface Unit's unit number is set to 0.
The Unit's allocated CIO area words begin at CIO 2000.

Note When the sample programs are used as-is, verify that the bits and words used in the sample program are not being used already by another Special I/O Unit or elsewhere in the program.

6-1-1 Device Trigger

This program sends a GET message, which triggers another device in the system. The GET message can be used to trigger a single device or trigger two or more devices simultaneously.

Downloaded from Elcodis.com electronic components distributor

Program Example

The GET message is sent when W000.00 is turned ON.

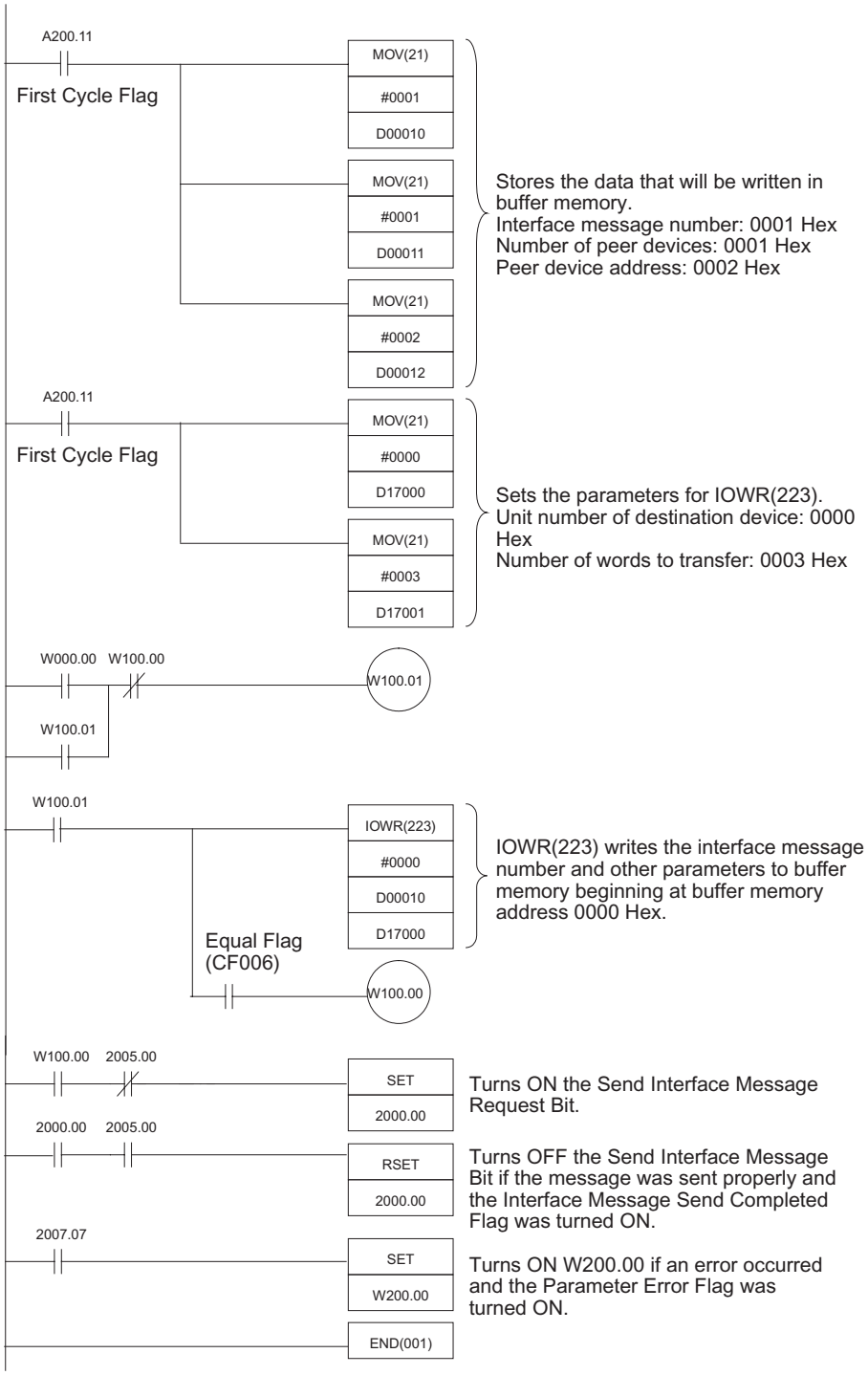

Downloaded from Elcodis.com electronic components distributor

6-1-2 Set Remote Status

This program sets a device to remote status. The REN message can be used to set a single device to remote status or set two or more devices simultaneously.

Program Example

The REN message is sent when W000.00 is turned ON.

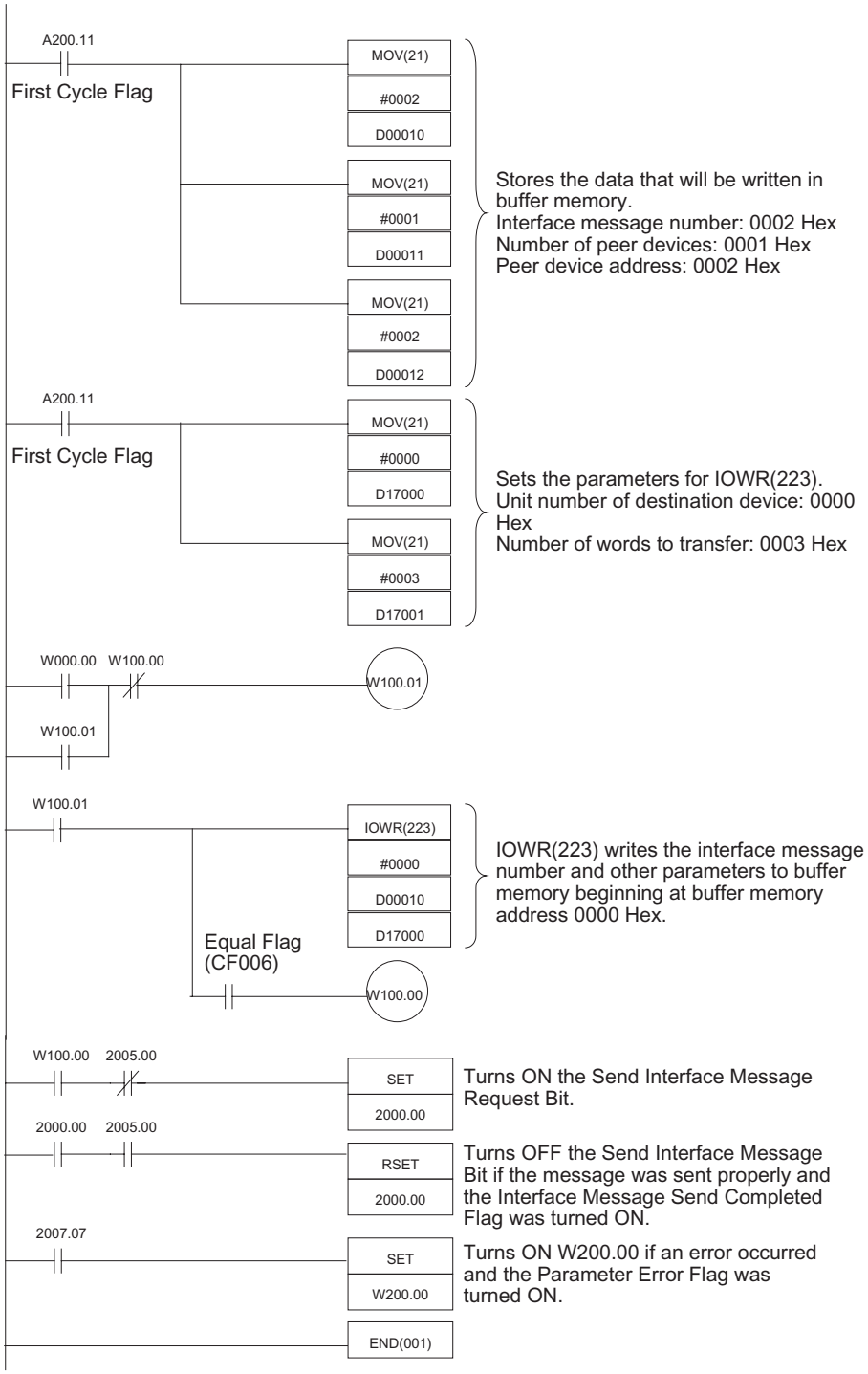

Downloaded from Elcodis.com electronic components distributor

6-1-3 Device Clear

This program initializes a device in the system.

A DCL message is sent if there is no address specification. An SDC message is sent if there is an address specification.

Program Example

In this example, an address is specified and an SDC message is sent. The SDC message is sent when W000.00 is turned ON.

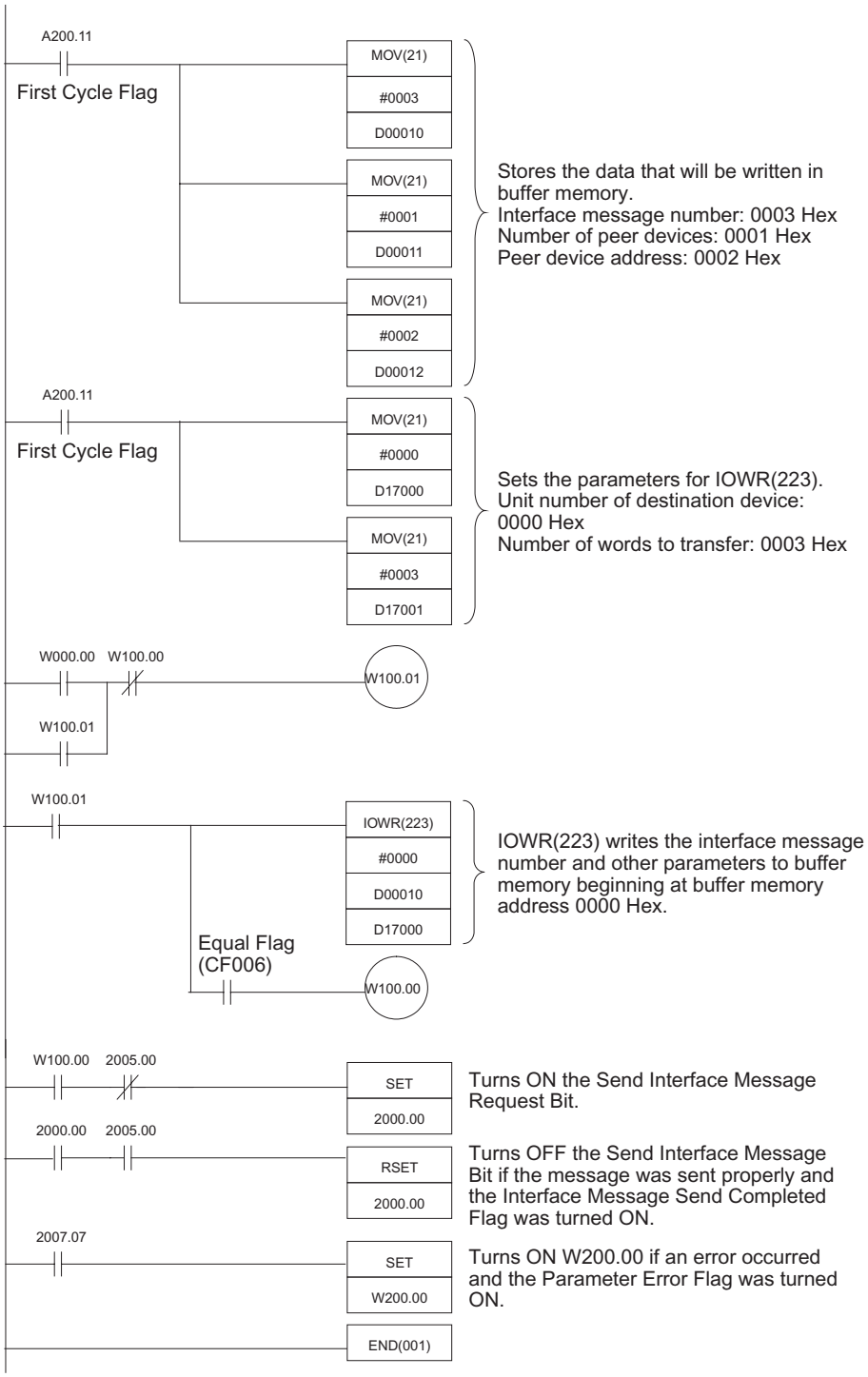

Downloaded from Elcodis.com electronic components distributor

6-1-4 Set Local Status

This program sets a device to local status.

The control line REN is set to high if there is no address specification. A GTL message is sent if there is an address specification.

Program Example

In this example, an address is specified and a GTL message is sent. The GTL message is sent when W000.00 is turned ON.

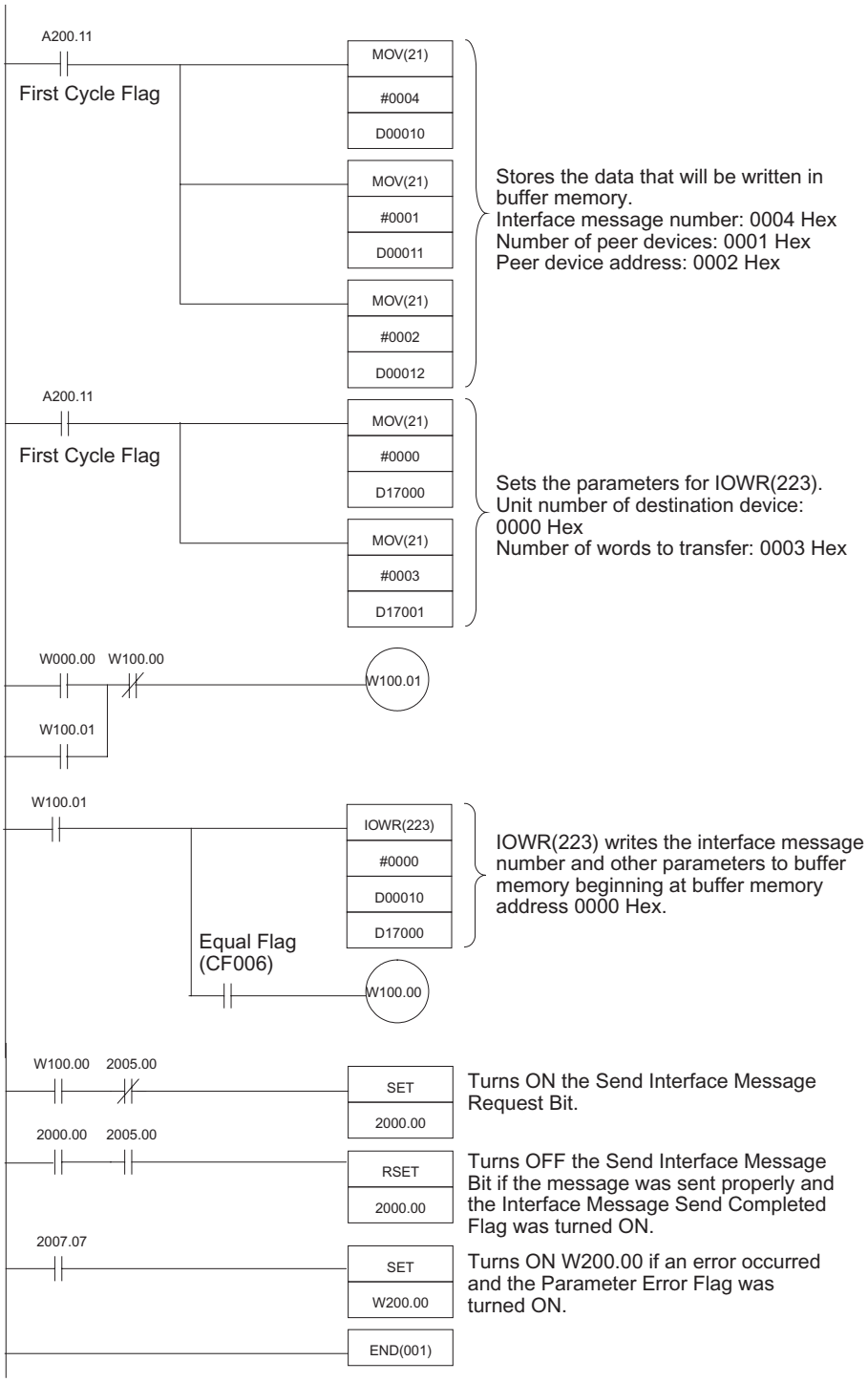

Downloaded from Elcodis.com electronic components distributor

6-1-5 Set Local Lockout

This program sends an LLO message and prohibits operations from the destination device's front panel.

Program Example

The LLO message is sent when W000.00 is turned ON.

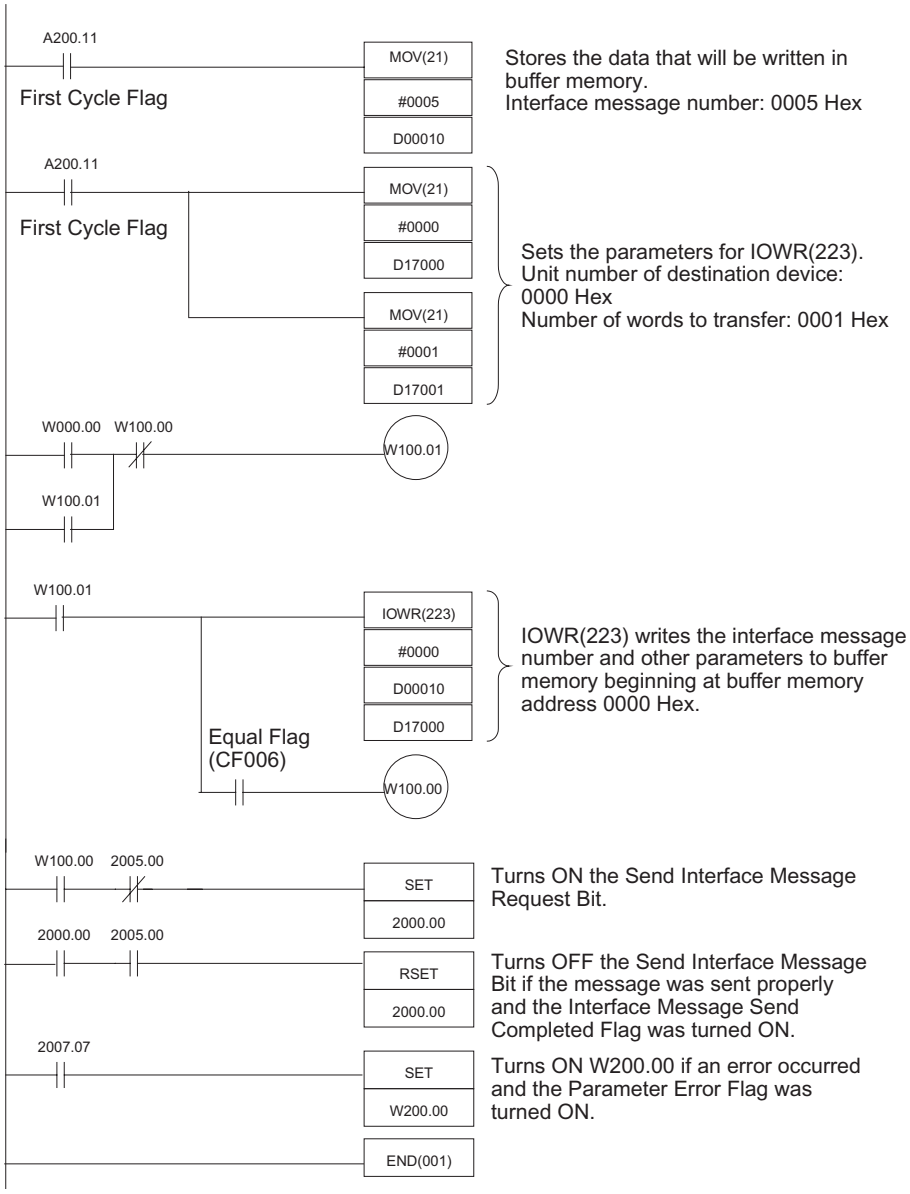

Downloaded from Elcodis.com electronic components distributor

6-1-6 Serial Poll

This program reads the status of a GP-IB device.

Program Example

The SRQ Received Flag (CIO 2007.12) is turned ON to perform serial polling.

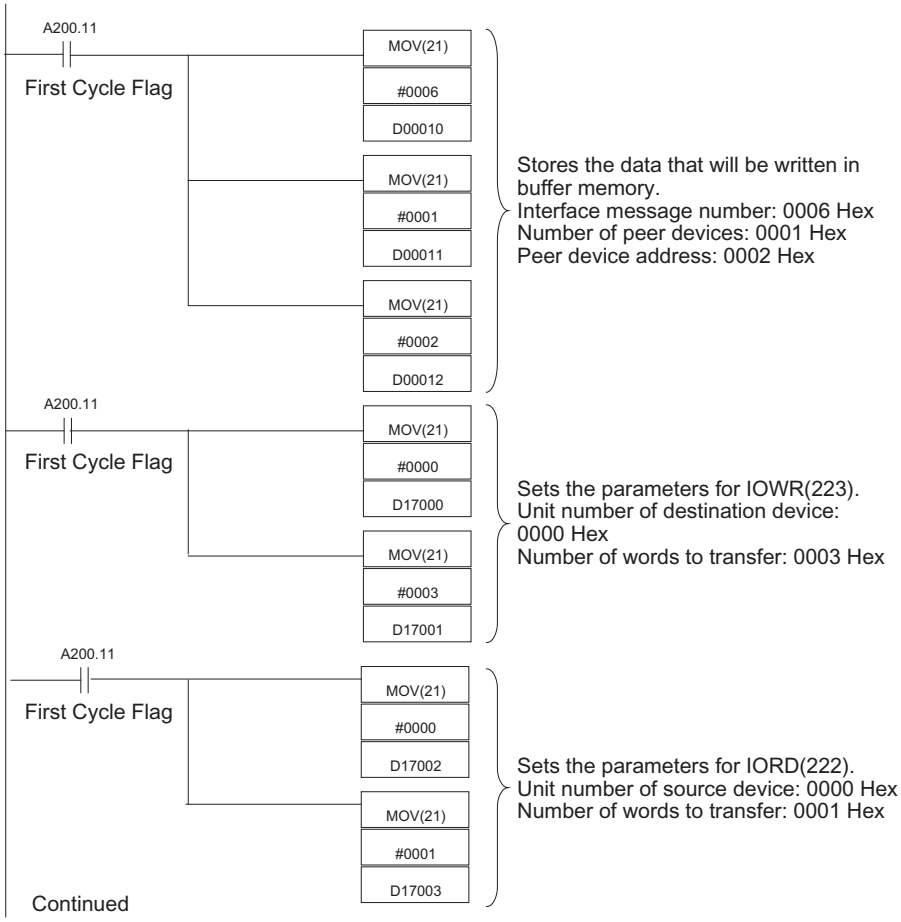

Downloaded from Elcodis.com electronic components distributor

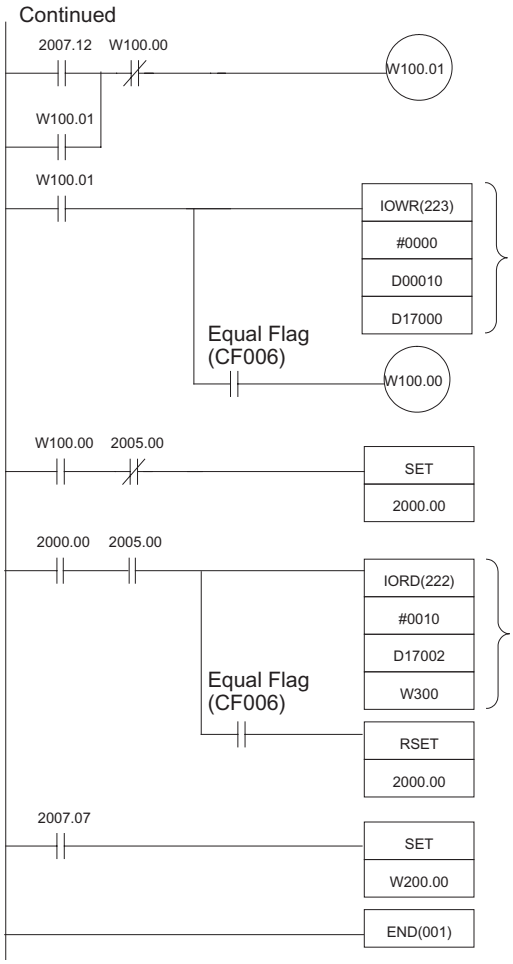

IOWR(223) writes the interface message number and other parameters to buffer memory beginning at buffer memory address 0000 Hex.

Turns ON the Send Interface Message Request Bit.

IORD(222) reads the serial polling status from buffer memory address 0010 Hex and stores the data in W300.

Turns OFF the Send Interface Message Bit if the message was sent properly and the Interface Message Send Completed Flag was turned ON.

Turns ON W200.00 if an error occurred and the Parameter Error Flag was turned ON.

Downloaded from Elcodis.com electronic components distributor

6-1-7 Interface Clear

This program initializes the interface functions. Sets control line IFC to “L” for approximately 100 μs.

Program Example

The IFC message is sent when W000.00 is turned ON.

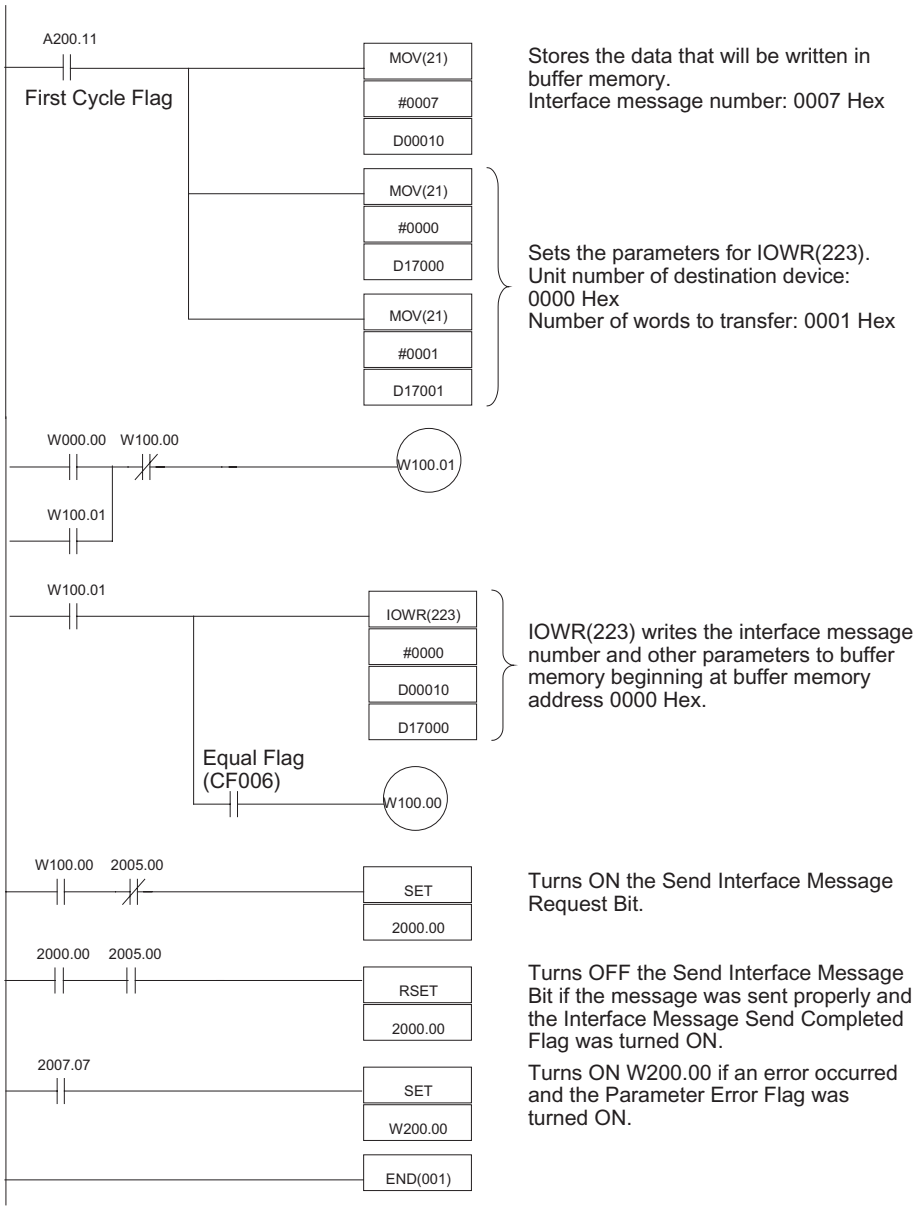

Downloaded from Elcodis.com electronic components distributor

6-1-8 Sending Data

This program sends data to a device.

Program Example

Data is transmitted when W000.00 is turned ON. In this example, 50 words of transmission data are stored in the DM area starting at D01000. The transmission delimiter specification and timeout monitor time set in the allocated DM area words are used for the transmission.

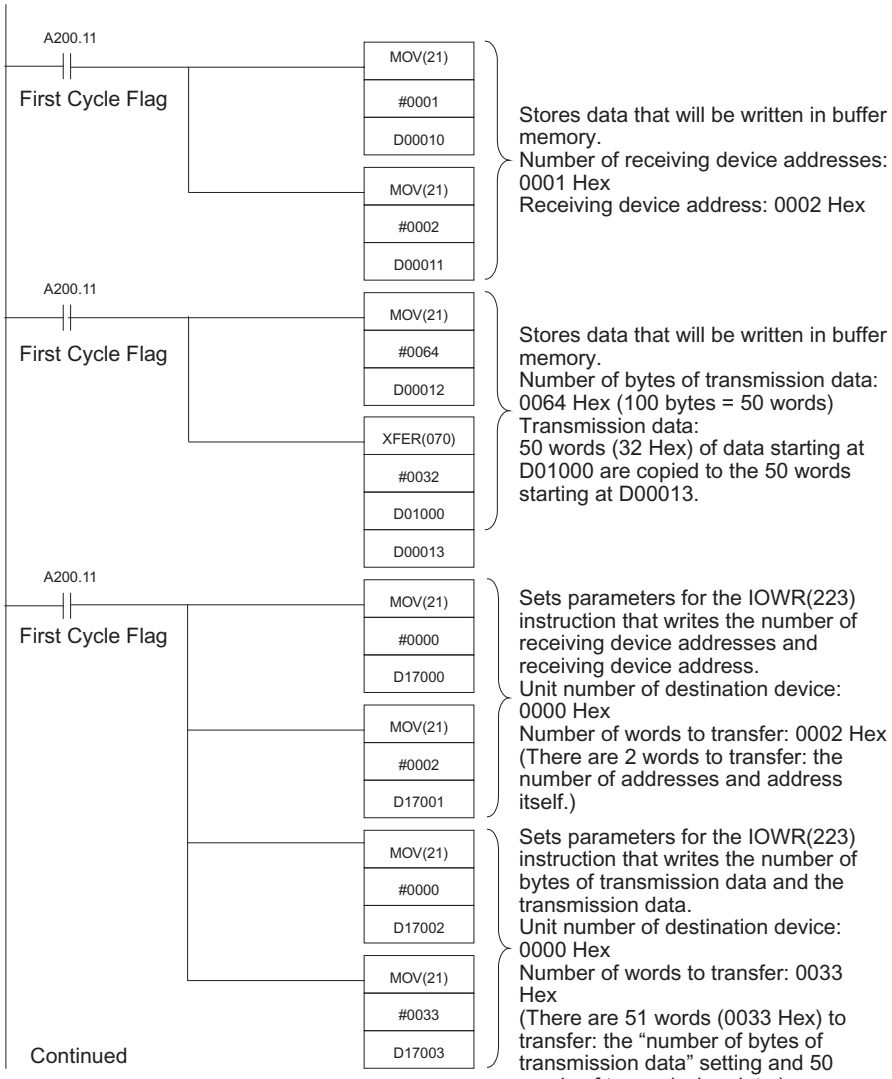

Downloaded from Elcodis.com electronic components distributor

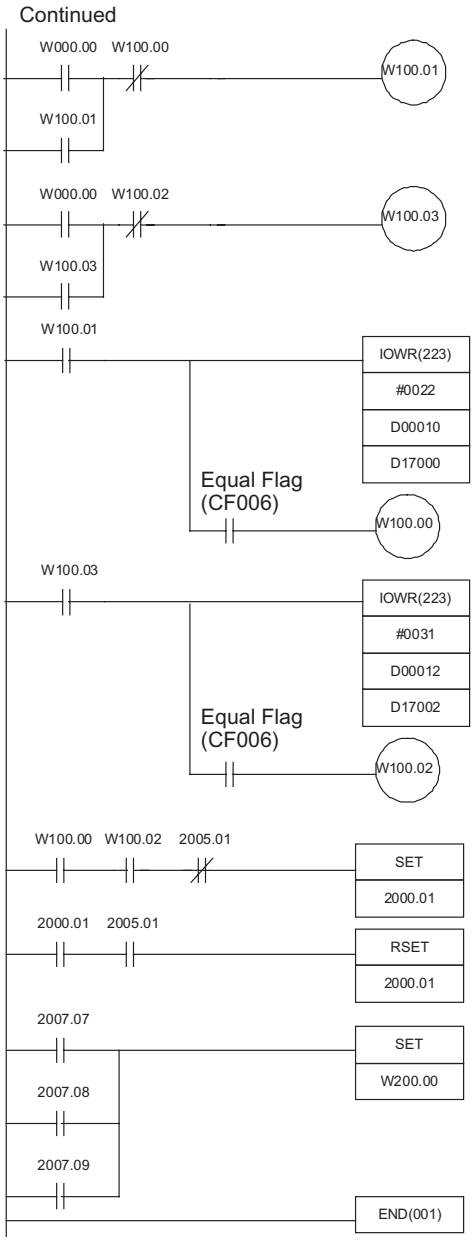

IOWR(223) writes the "number of receiving device addresses" and receiving device address to buffer memory beginning at buffer memory address 0022 Hex.

IOWR(223) writes the "number of bytes of transmission data" setting and the transmission data to buffer memory beginning at buffer memory address 0031 Hex.

Turns ON the Send Data Request Bit.

Turns OFF the Send Data Request Bit if the message was sent properly and the Data Send Completed Flag was turned ON.

Turns ON W200.00 if an error occurred.

Downloaded from Elcodis.com electronic components distributor

6-1-9 Receiving Data

This program receives data from a device.

Program Example

Data is transferred when W000.00 is turned ON and the received data is stored in the DM area starting at D02000. The reception delimiter specification and timeout monitor time set in the allocated DM area words are used for the reception.

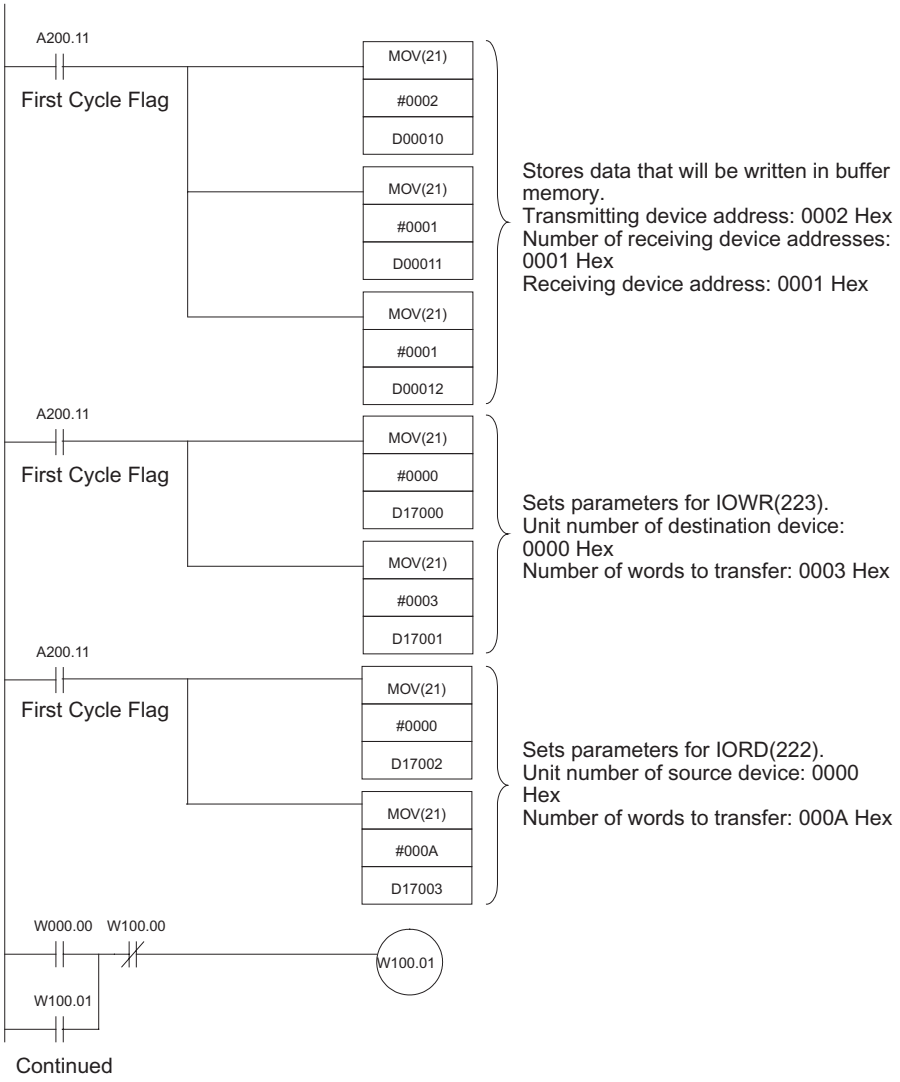

Downloaded from Elcodis.com electronic components distributor

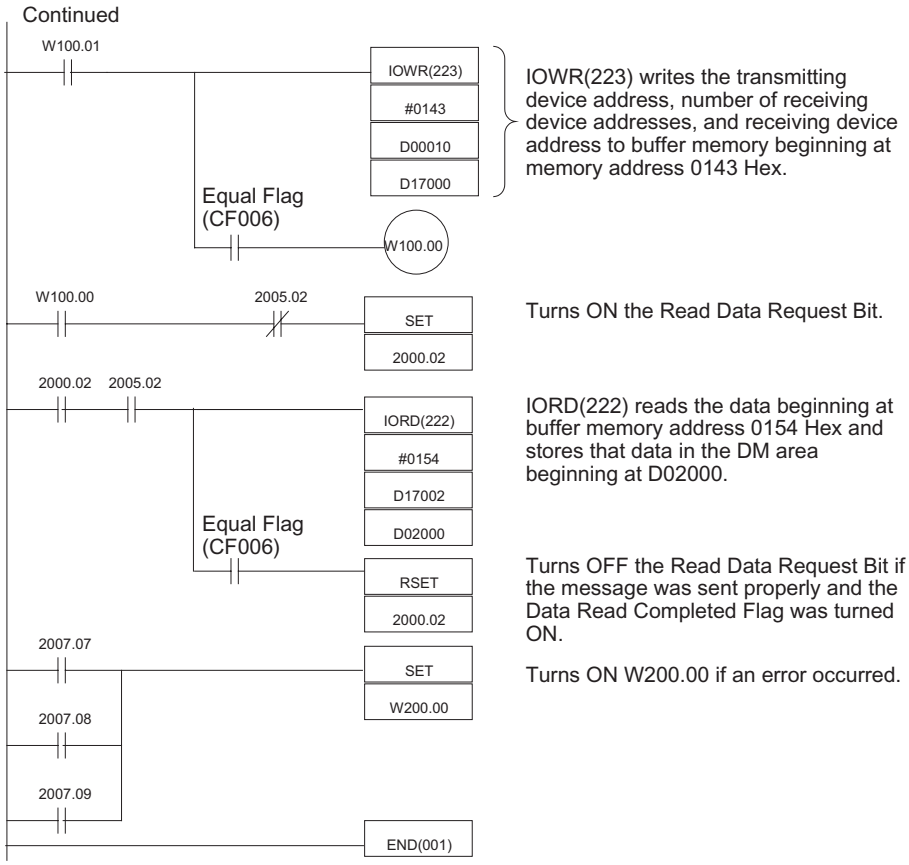

Note The sample program above always reads 10 words (20 bytes) of data. The Unit records the number of bytes of data that were actually read in allocated CIO area word n+6.

6-2 Slave Mode Program Examples

The programming examples in this section use the following system configuration.

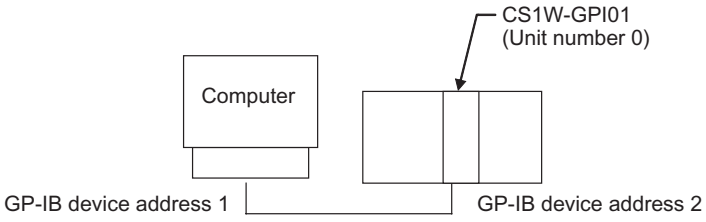

In this example, the GP-IB Interface Unit's unit number is set to 0. The Unit's allocated CIO area words begin at CIO 2000.

Note When the sample programs are used as-is, verify that the bits and words used in the sample program are not being used already by another Special I/O Unit or elsewhere in the program.

Downloaded from Elcodis.com electronic components distributor

6-2-1 Sending Data

This program sends data to another device.

Program Example

If the GP-IB Interface Unit is operating as a Slave, it sends data when a send request has been received from the system Controller, i.e., the Talker Specification Received Flag (CIO 2007.13) has been turned ON. In this example, the 5 words of transmission data are stored in the DM area beginning at D01000. The transmission delimiter specification and timeout monitor time set in the allocated DM area words are used for the transmission.

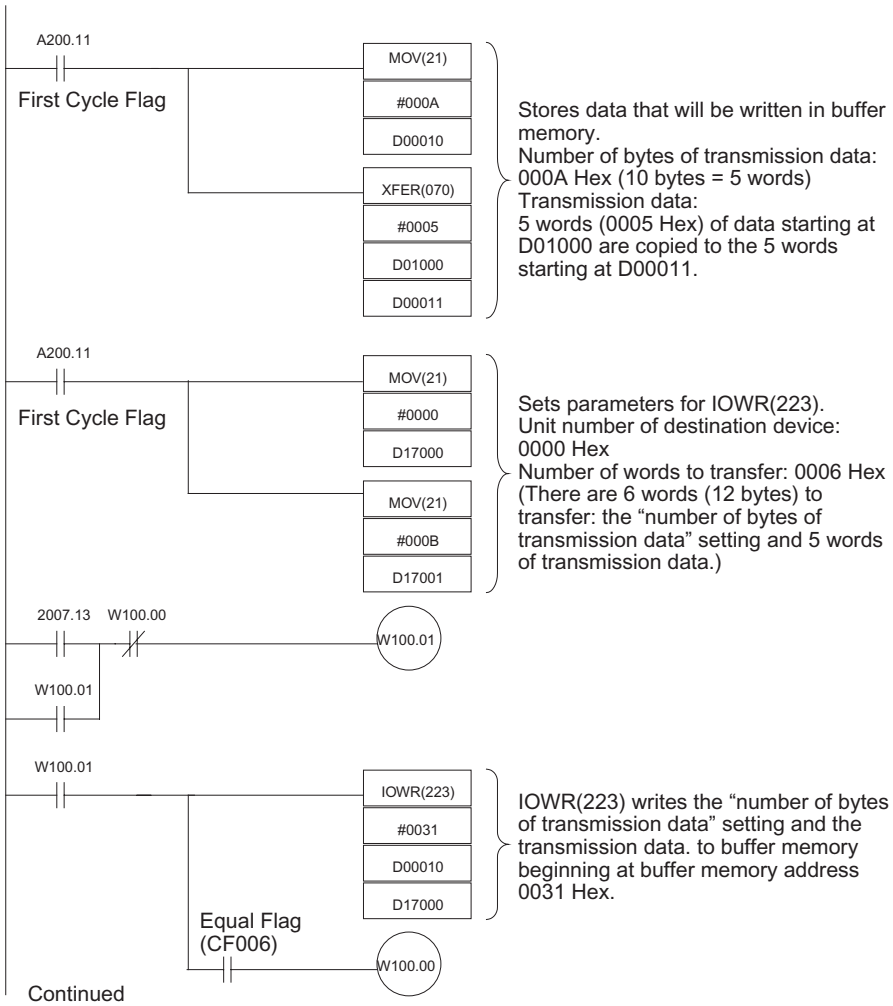

Downloaded from Elcodis.com electronic components distributor

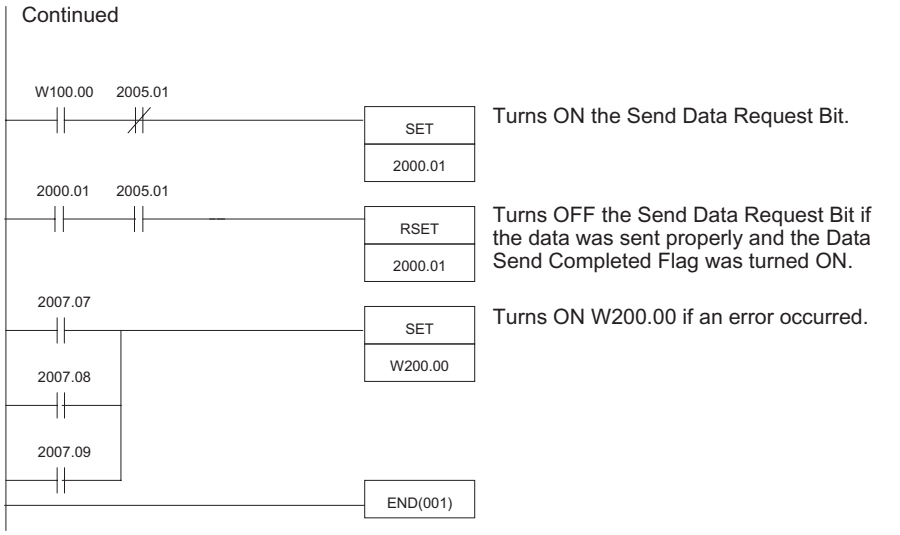

6-2-2 Receiving Data

This program receives data from another device.

Program Example

If the GP-IB Interface Unit is operating as a Slave, it receives data automatically. The data is read when all of the data has been received into the buffer, i.e., the Data Read Completed Flag (CIO 2005.05) has been turned ON. In this example, 10 words of received data are stored in the DM area beginning at D02000. The reception delimiter specification, timeout monitor time, and number of bytes to receive set in the allocated DM area words are used for the reception.

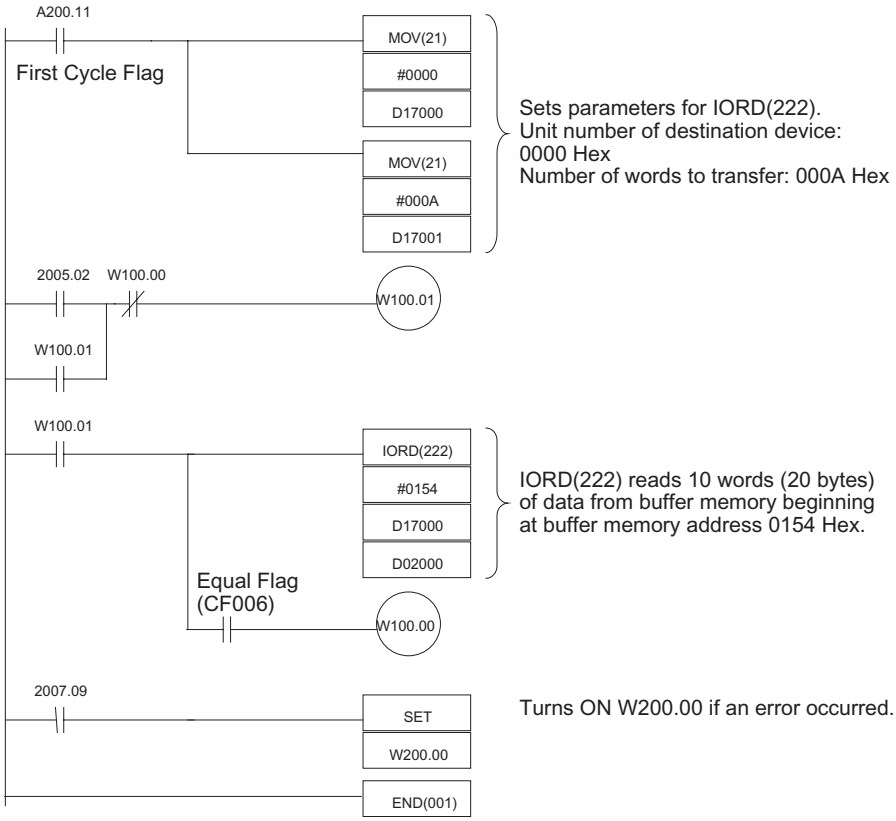

Downloaded from Elcodis.com electronic components distributor

Note The sample program above always reads 10 words (20 bytes) of data. The Unit records the number of bytes of data that were actually read in allocated CIO area word n+6.

6-2-3 Service Request

This program sends a service request (SRQ message) to the Controller.
The Controller performs serial polling and the Unit's status byte is sent during this serial polling from the Controller.

Program Example

When W000.00 is turned ON, the SRQ Request Bit (CIO 2000.14) is turned ON and an SRQ message is sent to the Controller.

The SRQ Received Flag (CIO 2007.12) will go from ON to OFF when the status byte transmission is completed, so this flag can be used to detect the transfer of the status byte.

Before turning on the SRQ Request Bit, write the status byte data (bits CIO 2000.08 to CIO 2000.13 and CIO 2000.15) that will be sent during serial polling.

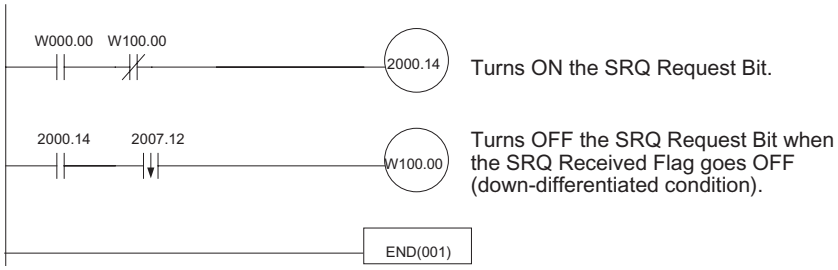

6-3 Enhanced BASIC Command Program Example

OS (Output Status)

Sends the Unit's internal status to the host computer. The following diagram shows the functions of the signals in the status byte.

---	---	BIN	---	P.ERR	C.ERR	T.ERR	G.ERR

BIN: When this bit is "1", it indicates that the transmission data is in binary format.

P.ERR: When this bit is "1", it indicates that a parameter error has occurred.

C.ERR: When this bit is "1", it indicates that a command error has occurred.

T.ERR: When this bit is "1", it indicates that a timeout error has occurred.

G.ERR: When this bit is "1", it indicates that a GP-IB interface error has occurred.

---: Reserved (variable signal status)

BASIC Programming Example

```
100  PRINT @1;"OS"@          'Send OS command
200  INPUT @1;ST$            'Receive status
300  PRINT ST$               'Display status
```

IN (Initialize)

This command returns the GP-IB Interface Unit to its initial status. Use this command to initialize just the GP-IB Interface Unit.

BASIC Programming Example

```
100  PRINT @1;"IN"@          'Send IN command
```


Downloaded from Elcodis.com electronic components distributor

ID0 (Input Data: ASCII)

When an ID0 command is received from the host computer, the rest of the received data is treated as ASCII data. The data is converted to binary format, and stored in the reception data area.

BASIC Programming Example

```
100  PRINT @1;"ID0,123ABC"@
```

ID1 (Input Data: Binary)

When an ID1 command is received from the host computer, the rest of the received data is treated as binary data and stored unchanged in the reception data area.

BASIC Programming Example

```
100  PRINT @1;"ID1,TEST DATA"@
```

OD0 (Output Data: ASCII)

When an OD0 command is received from the host computer, the transmission data format is set to ASCII. The data in the transmission data area is converted to ASCII and sent. The Unit will continue to convert output data to ASCII before sending it unless an OD1 command is received.

BASIC Programming Example

```
100  PRINT @1;"OD0"@          'Send OD0 command
200  INPUT @1;DT1$            'Receive 1st data block
          :          :          :
          :          :          :
500  INPUT @1;DT4$            'Receive 4th data block
```

OD1 (Output Data: Binary)

When an OD1 command is received from the host computer, the transmission data format is set to binary. The data in the transmission data area is sent unchanged in binary format. The Unit will continue to send data in binary format unless an OD0 command is received.

BASIC Programming Example

```
100  PRINT @1;"OD1"@          'Send OD1 command
200  INPUT @1;DT1$            'Receive 1st data block
          :          :          :
          :          :          :
500  INPUT @1;DT4$            'Receive 4th data block
```


Downloaded from Elcodis.com electronic components distributor

SECTION 7
Error Processing and Maintenance

This section provides tables to help troubleshoot and correct errors that may occur when operating the GP-IB Interface Unit.

7-1 Using LED Indicators for Error Processing 62
7-2 Using the Status Byte for Error Processing 62
7-3 Other Communications Problems 65

Downloaded from Elcodis.com electronic components distributor

7-1 Using LED Indicators for Error Processing

The following table shows the status of the GP-IB Interface Unit's indicators for various errors that can occur as well as the steps most likely to correct the errors.

Indicator status			Error Flag in Status Byte (See note 1.)	Probable cause	Possible remedy
RUN	ERC	ERH			
Not lit	Not lit	Not lit	---	Power is not being supplied to the PLC properly.	Check the power supply voltage and provide the proper power supply.
				The GP-IB Interface Unit's fastener has become loose.	Mount the Unit securely.
				The GP-IB Interface Unit is mounted in the wrong Rack location.	Mount the Unit in an allowed Rack location. Refer to *3-2 Mounting the Unit in the PLC* for details.
				The GP-IB Interface Unit is faulty.	Replace the Unit if the LEDs do not light when it is mounted in another PLC.
Not lit	Not lit	Lit	---	The PLC's I/O tables has not been created or is incorrect.	Set the PLC's I/O tables correctly.
				Another Special I/O Unit in the PLC has the same unit number setting.	Change the settings so that each Special I/O Unit (including Units in Expansion Racks) has a unique unit number.
				Error occurred when reading DM settings.	If an error occurred in the PLC, refer to the PLC's Operating Manual for details on correcting the error. If the problem recurs, replace the Unit or PLC.
Not lit	Lit	Not lit	---	Incorrect primary address setting	Refer to *4-1-2 DM Area Allocation Details*, set the primary address properly, and restart the PLC.
Lit	Not lit	Lit	---	An error occurred in the PLC.	Refer to the PLC's Operating Manual for details on correcting the error. If the problem recurs, replace the PLC.
Lit	Lit	Not lit	Bit 9 of n+7	Timeout error: A timeout error occurred during transmission or reception. (See note 2.)	Refer to Section *7-2 Using the Status Byte for Error Processing*.
			Bit 10 of n+7	Command error: The received data was not an enhanced BASIC command. (See note 2.)	
				Command error: The received data contained data that was not ASCII. (See note 2.)	
			Bit 8 of n+7	GP-IB error: An error occurred during handshaking with another device. (See note 2.)	
			Bit 7 of n+7	Parameter error: A parameter error occurred. (See note 2.)	

Note

1. The status byte is in CIO word n+7. (The allocated CIO area words begin at n, and n = CIO 2000 + (10 × unit number).)
2. After one of these errors, the ERC indicator and the corresponding error flag (bits 7 to 10 of n+7) will go OFF if the data is later transferred normally.

7-2 Using the Status Byte for Error Processing

The GP-IB Interface Unit indicates its communications status in the status byte in the allocated CIO area words of the PLC. The cause of an error can be determined by checking the contents of the status byte. The following table

Downloaded from Elcodis.com electronic components distributor

shows the errors indicated in the status area as well as the steps most likely to correct the errors.

Error Flags in n+7 (n = CIO 2000 + (10 × unit number))

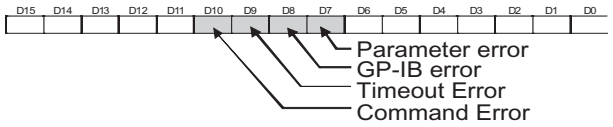

Error Flag	Probable cause	Possible remedy
Parameter error (Bit 7 of n+7 ON)	The interface message number specified in buffer memory is invalid.	Set this parameter correctly.
	The “number of peer devices” or “peer device addresses” specified in buffer memory are invalid.	Set these parameters correctly.
	The “number of receiving device addresses” or “receiving device addresses” specified in buffer memory are invalid.	Set these parameters correctly.
	The “peer device addresses” were not set when making a serial polling request.	Set the peer device addresses when making a serial polling request.
	An IORD(222) or IOWR(223) instruction addressed an address beyond the range of buffer memory.	Check the “starting address” and “number of words to transfer” settings so that the instruction does not exceed the range of the buffer memory.
GP-IB error (Bit 8 of n+7 ON)	A non-existent device address was specified in buffer memory for the “transmitting device address” or “receiving device address.”	Set the addresses correctly.
	The communications cable is not connected properly.	Check the connecting cable to the other device.
		Check whether the connectors are damaged or attached incorrectly.
	The communications peer device cannot be found.	Check whether there are two or more devices with the same device address setting in the system.
		Check whether there are two or more Controllers in the system.
		Check the other device’s power supply.
		Verify that the other device’s power supply is ON before the Controller starts communicating.
	A transmission error occurred because of noise in the system.	Change cable routes or reduce noise in the environment.

Downloaded from Elcodis.com electronic components distributor

Error Flag	Probable cause	Possible remedy
Timeout error (Bit 9 of n+7 ON)	A non-existent device address was specified in buffer memory for the “transmitting device address” or “receiving device address.”	Set the addresses correctly.
	The timeout monitor time is too short.	Set a longer timeout monitor time in the allocated DM area words or Buffer Memory. (Restart the PLC after changing the setting.) If settings in the allocated DM Area words are being used, either turn the power supply to the PLC OFF and then back ON or reset the Unit.
	The delimiter settings for the transmitting device and receiving device are not the same.	Set the same delimiter setting in the allocated DM area words or Buffer Memory (transmitting device or receiving device) that is set in the other device. If settings in the allocated DM Area words are being used, either turn the power supply to the PLC OFF and then back ON or reset the Unit.
	The peer device is not sending and receiving data.	Make sure the peer device is able to send and receive data. When the GP-IB Interface Unit is the receiving device, it cannot receive the next data, unless the IORD(222) instruction is executed after the Data Reception Flag turns ON. This may result in the peer device also detecting a timeout error. Always executed IORD(222) immediately after the Data Reception Flag turns ON.
	The communications cable is not connected properly.	Check the connecting cable to the other device.
		Check whether the connectors are damaged or attached incorrectly.
	The communications peer device cannot be found.	Check the other device’s power supply.
		Check whether there are two or more Controllers in the system.
	A transmission error occurred because of noise in the system.	Change cable routes or reduce noise in the environment.
Command error (Bit 10 of n+7 ON)	The GP-IB Interface Unit is operating in Slave mode and the enhanced BASIC commands function is enabled, but the received data was not an enhanced BASIC command.	Disable the enhanced BASIC commands function in the allocated DM area words by setting bits 08 to 15 of m+1 to “00”. If settings in the allocated DM Area words are being used, either turn the power supply to the PLC OFF and then back ON or reset the Unit.
		Check the transmitting device and verify that the BASIC commands are being sent properly.
	The received data contained data that was not ASCII.	Check the transmitting device and verify that ASCII data is being sent properly.

Downloaded from Elcodis.com electronic components distributor

7-3 Other Communications Problems

Problem		Probable cause and remedy
The byte order is reversed in the received data.	---	Check the “data storage order” setting in the allocated DM area words (bits 00 to 07 of m+1) and change it if necessary.
Only part of the expected data can be received.	The GP-IB Interface Unit is the receiving device and allocated CIO word n+6 (number of data bytes received) indicates that the Unit received the expected number of bytes.	The “number of words to transfer” setting in the IORD(222) operand is less than the number of words received by the Unit. Check the “number of data bytes received” value in n+6 and set the IORD(222) operand correctly.
		A single IORD(222) instruction can read up to 128 words of data. Two or more IORD(222) instructions must be executed if more than 128 words have been received. Refer to *4-4-3 Reading more than 128 Words* for more details.
	The GP-IB Interface Unit is the receiving device and allocated CIO word n+6 (number of data bytes received) indicates that the Unit received less data than expected.	When binary data is being transferred, it is possible that the data accidentally contained the delimiter code. Set the system so that reception is completed when the EOI signal is detected.
		Check whether the “number of bytes to receive” setting in the allocated DM area word (m+5) is less than the actual number of bytes being transferred. Change the setting if necessary.
	The GP-IB Interface Unit is the transmitting device.	The number of bytes of transmission data in buffer memory is less than planned. Set the “number of words to transfer” operand correctly in IOWR(223).
More data than expected was received. (There is incorrect data at the end of the received data.)	The GP-IB Interface Unit is the receiving device and allocated CIO word n+6 (number of data bytes received) indicates that the Unit received the expected number of bytes.	The “number of words to transfer” setting in the IORD(222) operand is greater than the number of words received by the Unit. Check the “number of data bytes received” value in n+6 and set the IORD(222) operand correctly.
	The GP-IB Interface Unit is the transmitting device.	The number of bytes of transmission data in buffer memory is greater than planned. Set the “number of words to transfer” operand correctly in IOWR(223).
		The number of bytes of transmission data written to the transmission data buffer by IOWR(223) is less than planned. Set the transmission data correctly with IOWR(223).
The received data was overwritten by new data before it could be read by IORD(222).	The GP-IB Interface Unit is operating in Slave mode.	After the Data Read Completed Flag went ON, the IORD(222) instruction read data from the wrong part of buffer memory. Verify that IORD(222) is reading from the buffer memory’s reception data area after the Data Read Completed Flag goes ON. The Unit is able to receive more data only after the Data Read Completed Flag is turned OFF by executing IORD(222).
The data received at the host computer (or other device) is garbled.	The enhanced BASIC commands function is being used.	Data is being transferred in binary mode. Execute the ID0 or OD0 command so that the Unit converts binary data to ASCII.

Downloaded from Elcodis.com electronic components distributor

Problem		Probable cause and remedy
The GP-IB Interface Unit is operating in Master mode (as the Controller) and it is set to trigger an interrupt program, but the interrupt program in the PLC does not start when an SRQ message is received.	---	The GP-IB Interface Unit is mounted in an Expansion Rack. The Unit must be mounted in the CPU Rack in order to use the interrupt program.
		There is no task in the CPU Unit with the SRQ interrupt task number specified in the allocated DM area word (bits 00 to 07 of m+6). Create an interrupt program.
		The CPU Unit is not operating. The CPU Unit must be in RUN or MONITOR mode.
A non-fatal interrupt task error occurred due to duplicate refreshing. (The Interrupt Task Error Flag, A40213, is ON.)	IORD(222) is being used to read data from the GP-IB Interface Unit in an interrupt task.	An error will occur if the Unit's I/O is refreshed from the interrupt task while it is being refreshed by cyclic I/O refreshing (duplicate refreshing). Change the PLC Setup (the Special I/O Unit Cyclic Refreshing settings) to disable cyclic I/O refreshing for the GP-IB Interface Unit.

Downloaded from Elcodis.com electronic components distributor

Appendix A
Sample Program

System Configuration

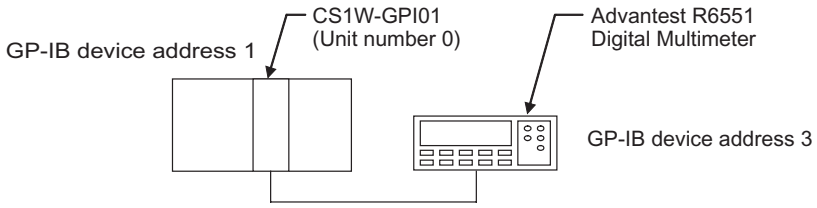

This program reads the DC voltage data measured by an Advantest Digital Multimeter. The data received from the Multimeter is stored in DM addresses D00000 to D00006.

The GP-IB Interface Unit operates as the Controller. The GP-IB Interface Unit's unit number is set to 0, so it is allocated CIO words CIO 2000 to CIO 2009 and DM words D20000 to D20099.

Digital Multimeter Settings

Make the following settings from the Digital Multimeter's front panel in advance.

Item	Setting
Primary address	3
Talker only mode	Cleared
Header	ON
Command group	0 (Advantest commands)
Measurement function	DC voltage measurement mode

Downloaded from Elcodis.com electronic components distributor

Program

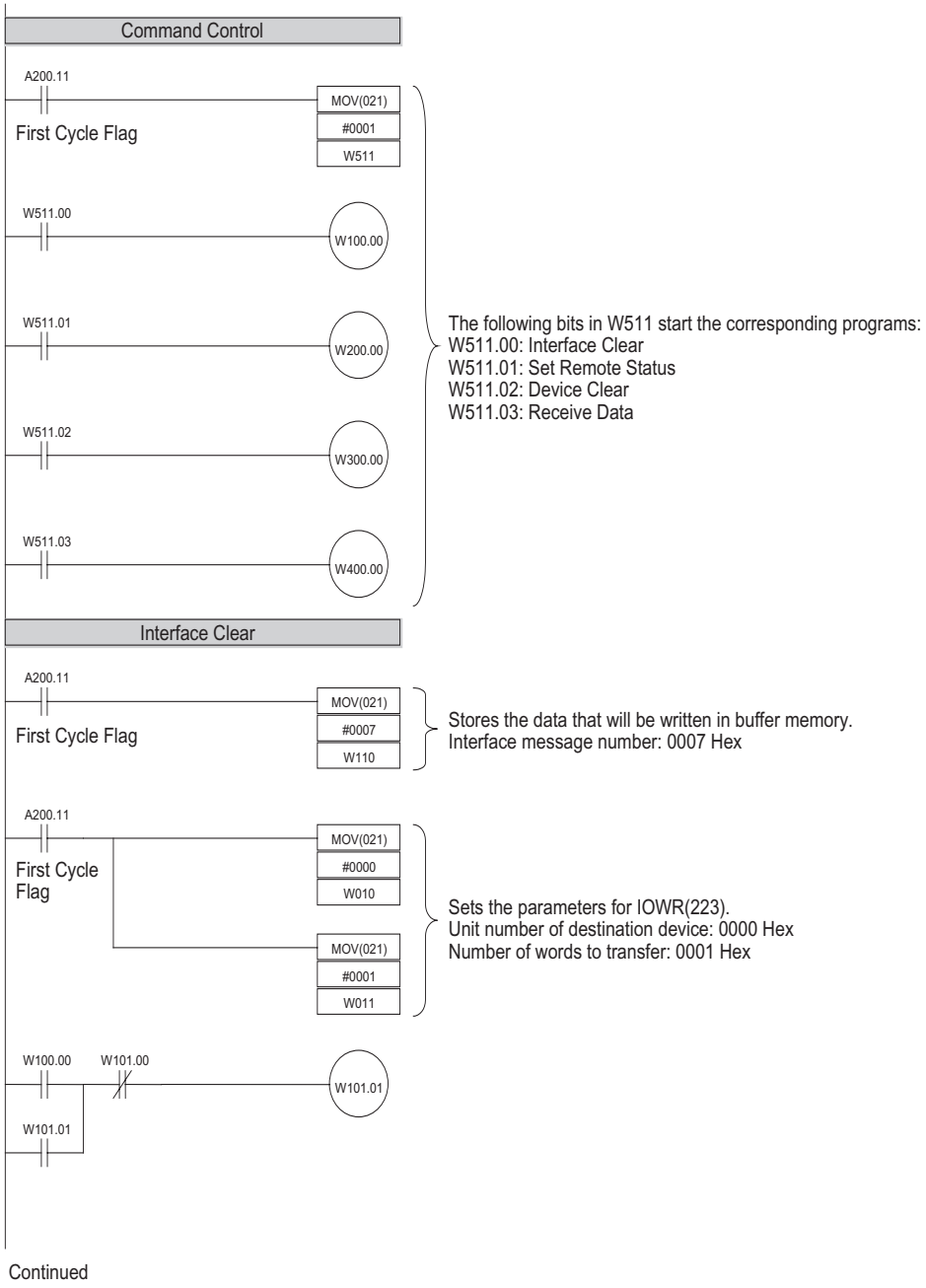

Continued

Downloaded from Elcodis.com electronic components distributor

Continued

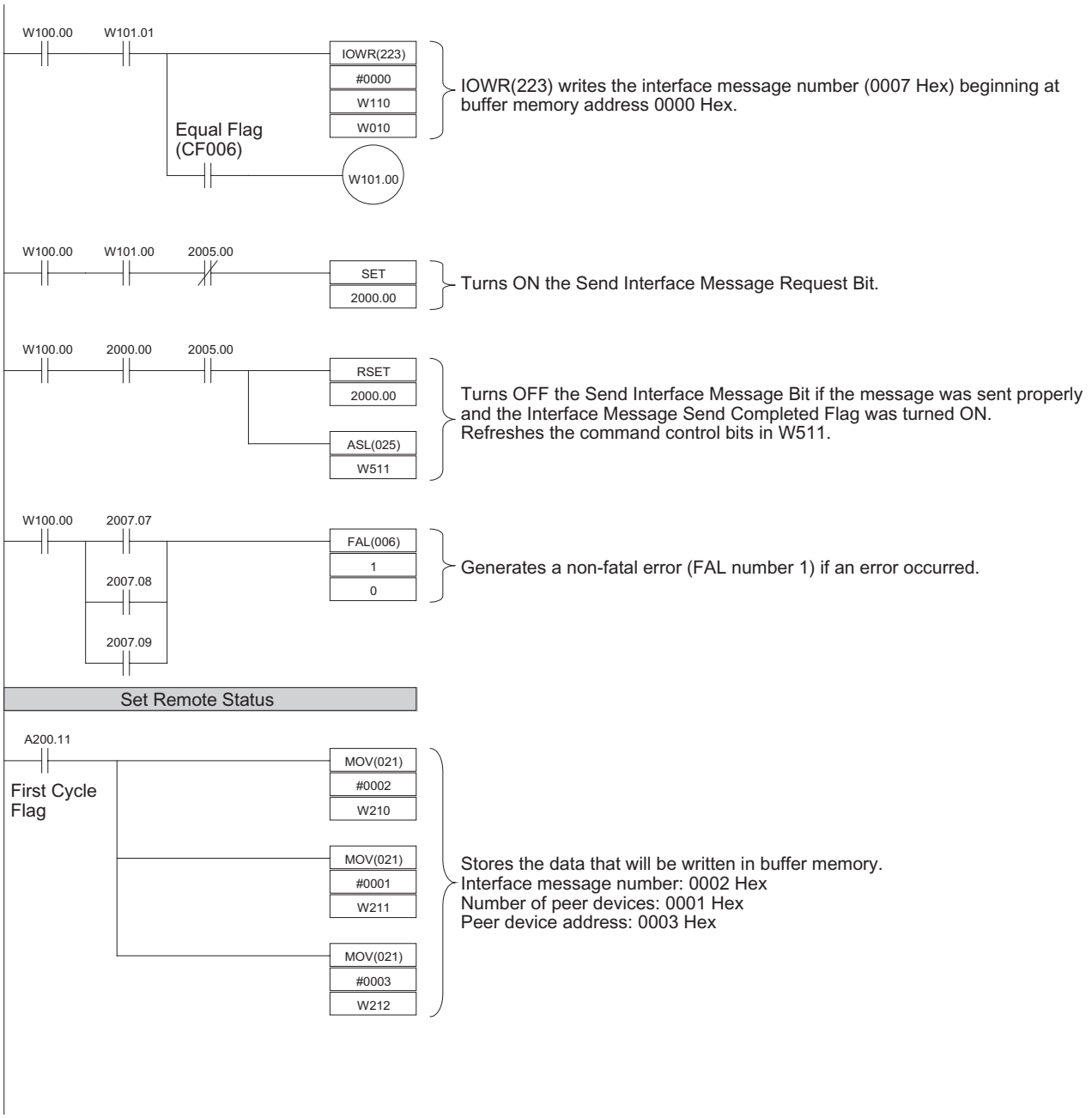

Continued

Downloaded from Elcodis.com electronic components distributor

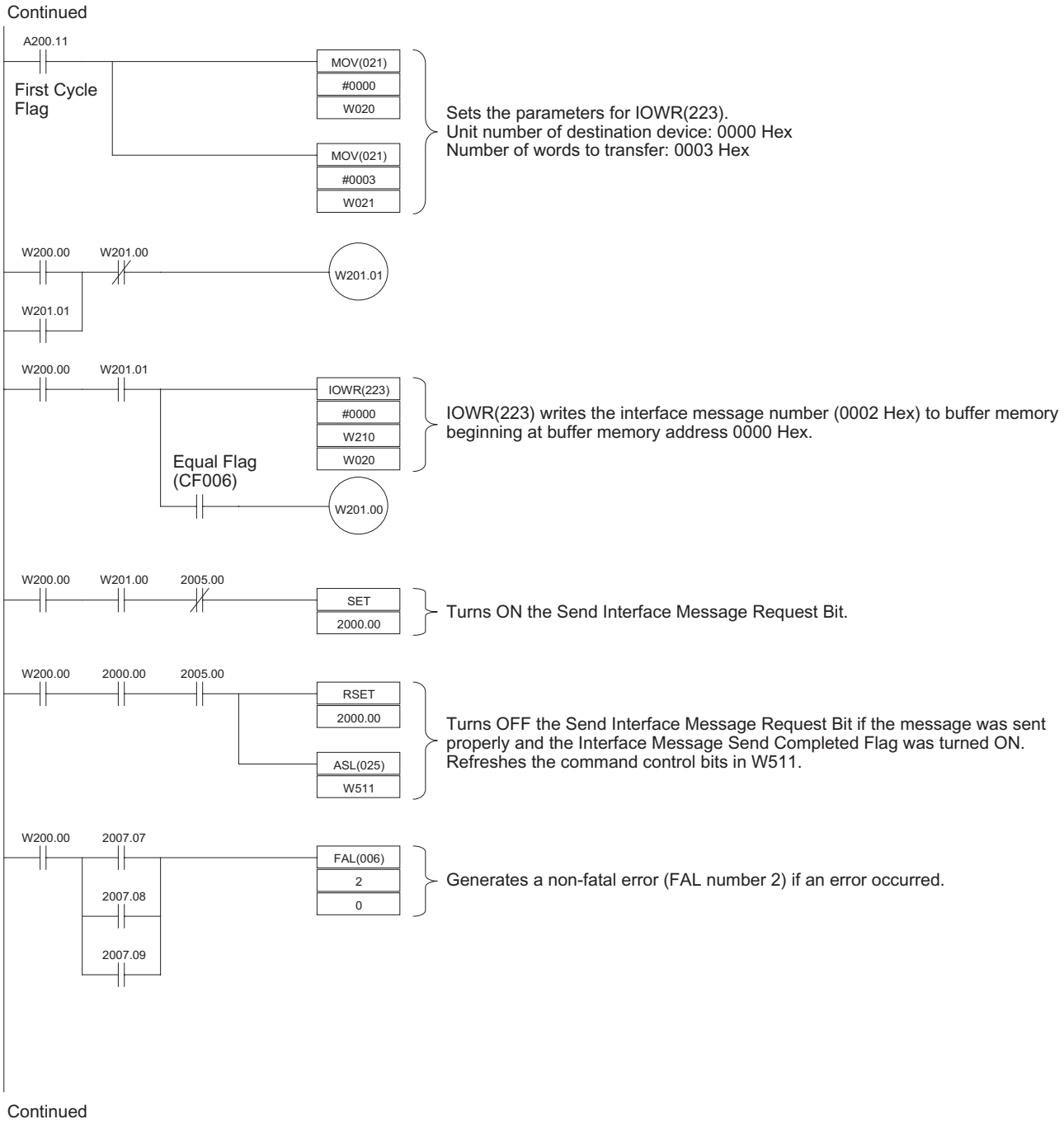

Downloaded from Elcodis.com electronic components distributor

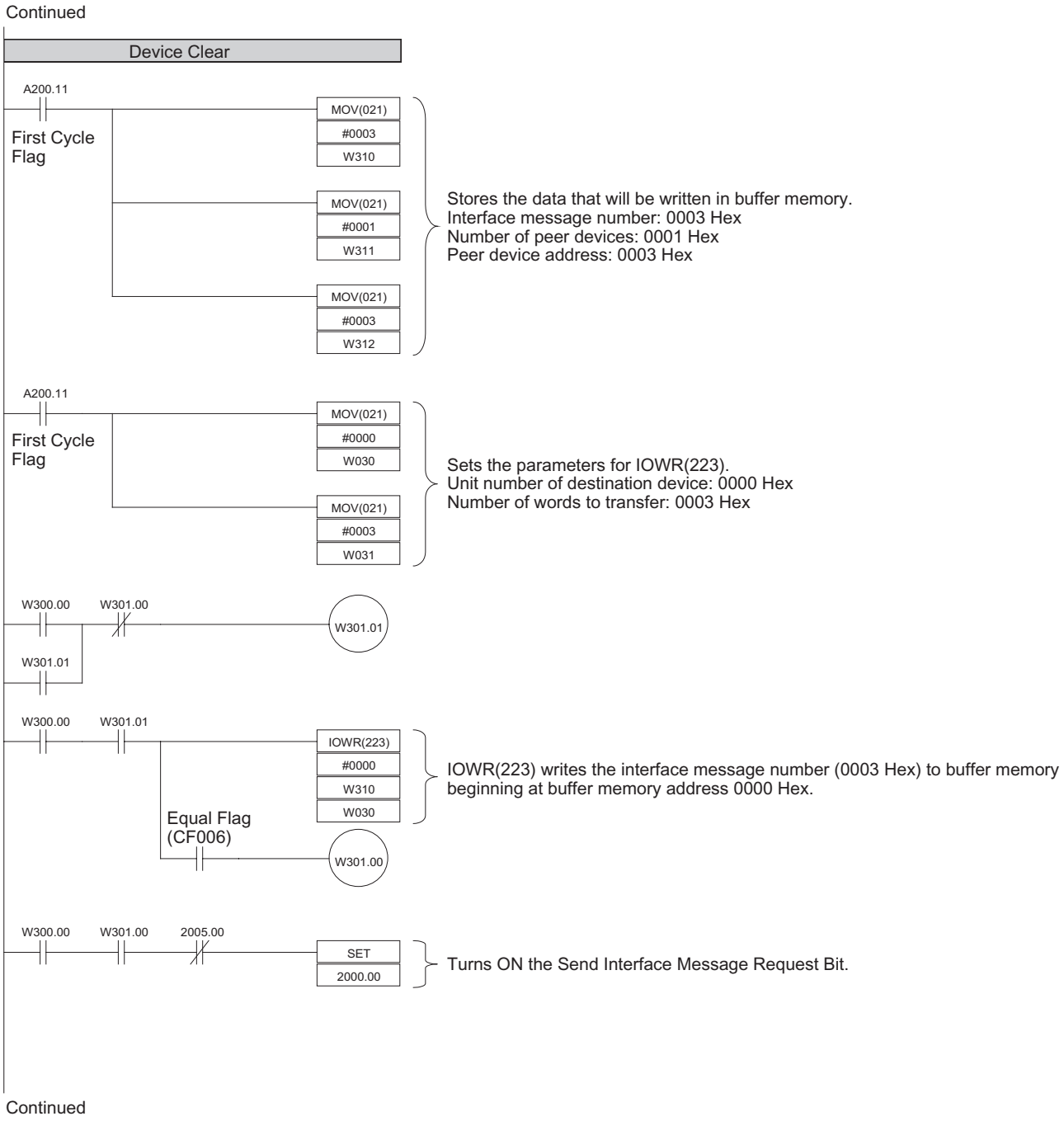

Downloaded from Elcodis.com electronic components distributor

Continued

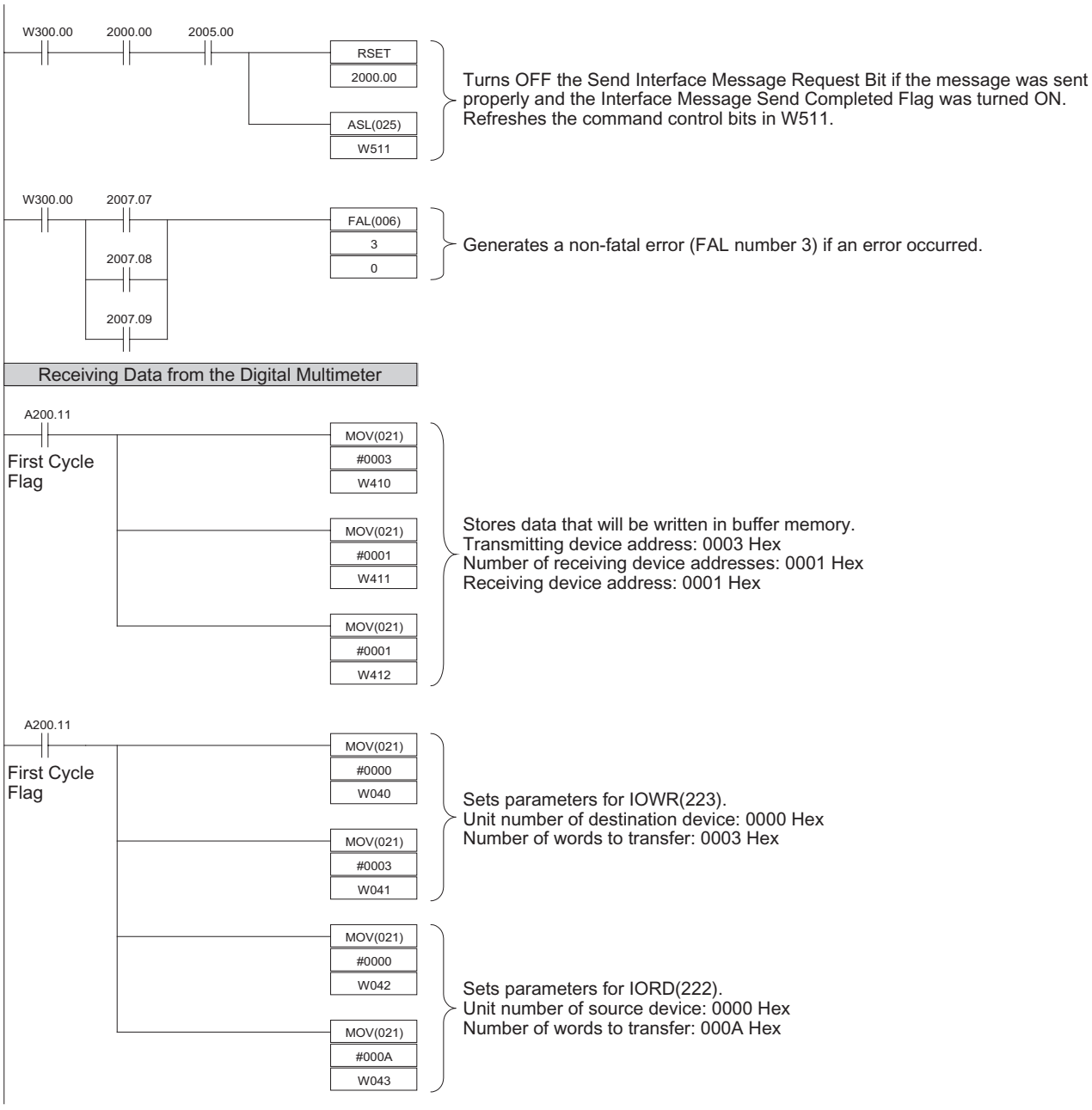

Continued

Downloaded from Elcodis.com electronic components distributor

Continued

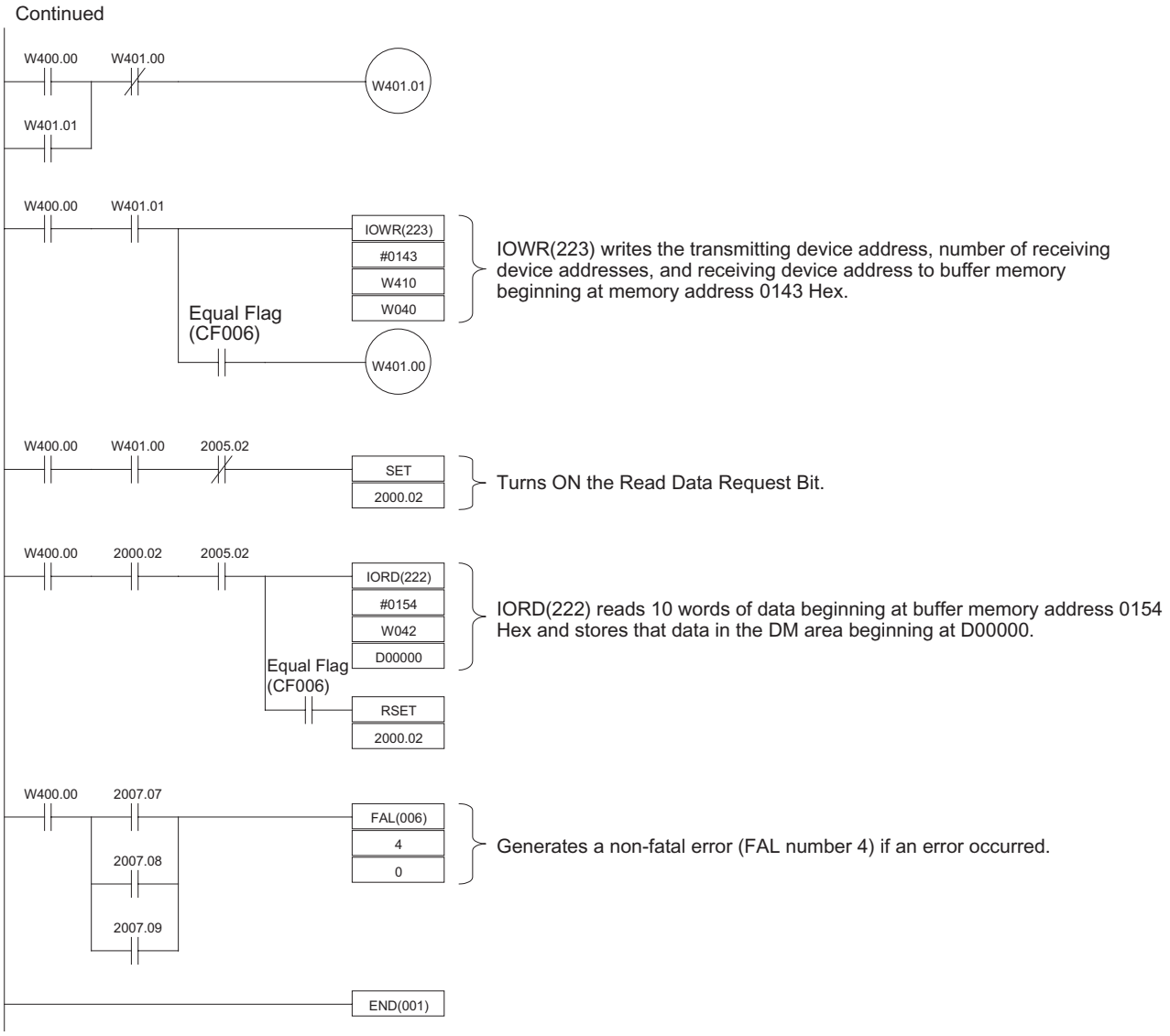

Downloaded from Elcodis.com electronic components distributor

Downloaded from Elcodis.com electronic components distributor

Appendix B

List of Accessories

GP-IB Cables (Recommended Cables)

Name	Model	Length	Manufacturer
GP-IB Harness	408JE-10P5	0.5 m	DDK Electronics, Inc.
	408JE-101	1 m	
	408JE-102	2 m	
	408JE-104	4 m	

Downloaded from Elcodis.com electronic components distributor

Downloaded from Elcodis.com electronic components distributor

Index

A

address
  device address, 7
  primary address, 7
Advantest Digital Multimeter
  sample program, 67

B

BASIC commands
  executing, 40
  program example, 59
  setting in DM Area, 22
buffer memory, 27
  reading data with IORD(222), 28
  writing data with IOWR(223), 28
byte order
  setting in DM Area, 22
  troubleshooting, 65

C

C500-GPI01
  functional comparison, 9
cable
  recommended cables, 17, 75
  wiring the cables, 16
CIO Area
  functions of allocated CIO words, 23
Command Error Flag, 26
commands
  transferring, 8
communications errors, 62, 65
communications timeout time
  setting in DM Area, 22
control bits
  CIO Area control bits, 24
Controller, 2
Controller Function Operating Flag, 26
CV500-BSC51/61
  functional comparison, 9

D

daisy-chain configuration, 16
data
  receiving data in Master mode, 34
    program example, 55
  receiving data in Slave mode, 38
    program example, 58
  sending data in Master mode, 32
    program example, 53
  sending data in Slave mode, 36
    program example, 57
  transferring, 8
data areas
  CIO Area words allocated to Unit, 23
  DM Area words allocated to Unit, 20
Data Read Completed Flag, 25, 29
Data Send Completed Flag, 25
data storage order
  setting in DM Area, 22
DCL message
  program example, 47
delimiters
  setting in DM Area, 22
Device Clear, 8
  program example, 47
Device Trigger, 8
  program example, 44
Digital Multimeter
  sample program, 67
dimensions, 14
DM Area
  functions of allocated DM words, 20

E

EC Directives, xvii
EMC Directives, xvii
EMI measures, xviii
enhanced BASIC commands
  executing, 40
  program example, 59
  setting in DM Area, 22
error displays
  LED indicators, 62
error flags
  status byte, 63
error processing, 61
  using LED indicators, 62
  using the status byte, 62
external interrupt
  settings in DM area, 23

Downloaded from Elcodis.com electronic components distributor

F

features, 1
flags
  CIO Area flags, 25
  error flags, 63

G

general specifications, 3
GET message
  program example, 44
GP-IB Error Flag, 26
GP-IB Harness, 75
GP-IB Interface Unit
  installation, 16

H

harness
  GP-IB Harness, 75

I

ID0 (Input Data, ASCII)
  enhanced BASIC command, 41, 60
ID0/OD0 Command Received Flag, 26
ID1 (Input Data, Binary)
  enhanced BASIC command, 41, 60
IEEE-488, 2
IEEE-488-1978, 2
IFC message
  program example, 52
IN (Initialize)
  enhanced BASIC command, 41, 59
indicators, 15
  error displays, 62
individual reception parameters
  setting in buffer memory, 27
individual transmission parameters
  setting in buffer memory, 27
installation, 16
INTELLIGENT I/O READ
  usage, 28
INTELLIGENT I/O WRITE
  usage, 28
Interface Clear, 8
  program example, 52
interface message number
  setting in buffer memory, 27
Interface Message Send Completed Flag, 25
interface messages, 8
  sending in Master mode, 32
interrupts
  external interrupt settings in DM area, 23
  program example sending service request, 59
  receiving SRQ messages in Master mode, 36
  sending SRQ messages in Slave mode, 40
  service request interrupt, 9
  SRQ Received Flag, 26
IORD(222)
  usage, 28
IOWR(223)
  usage, 28

L

ladder program
  programming examples, 43
  sample program, 67
LED indicators, 15
  error displays, 62
Listener, 2
Listener Specification Received Flag, 26
LLO message
  program example, 49
local mode
  Set Local Status, 8
LSTN indicator
  function, 15

M

Master mode, 2, 32
  communications functions, 32
  program examples, 44
  setting in DM Area, 21
memory
  buffer memory, 27
  CIO Area words allocated to Unit, 23
  DM Area words allocated to Unit, 20
messages
  interface messages, 8
mode
  Master mode, 2

Downloaded from Elcodis.com electronic components distributor

Slave mode, 2
mounting the Unit, 16

N

number of bytes to receive
setting in DM area, 23
Number of data bytes received, 25
number of peer devices
setting in buffer memory, 27

O

OD0 (Output Data, ASCII)
enhanced BASIC command, 41, 60
OD1 (Output Data, Binary)
enhanced BASIC command, 41, 60
operating environment
precautions, xiv
OS (Output Status)
enhanced BASIC command, 41, 59

P

Parameter Error Flag, 26
peer device addresses
setting in buffer memory, 27
PLCs
compatible PLCs, 4
Polling Status, 24
precautions
applications, xv
general, xi
installation, xv
operating environment, xiv
safety, xiii
wiring, xv
preparation for operation, 11
primary address
setting in DM Area, 21
program examples
Master mode, 44
Slave mode, 56

R

Rack
compatible PLC Racks, 16
Read Continuation Bit, 29
Read Data Request Bit, 24
reading buffer memory data with IORD(222), 28
receiving data
number of data bytes received, 25
setting number of bytes to receive, 23
receiving data in Master mode, 34
program example, 55
receiving data in Slave mode, 38
program example, 58
receiving SRQ messages in Master mode, 36
reception data buffer
setting in buffer memory, 27
reception delimiter
setting in DM Area, 23
remote mode
Set Local Status, 8
remote status
program example, 46
REN message
program example, 46
RUN indicator
function, 15

S

Send Data Request Bit, 24
Send Interface Message Request Bit, 24, 32
sending data in Master mode, 32
program example, 53
sending data in Slave mode, 36
program example, 57
sending SRQ messages in Slave mode, 40
Serial Poll, 8
program example, 50
serial polling, 9
program example, 50
serial polling status
setting in buffer memory, 27
service request, 9
sending in Slave mode
program example, 59
Set Local Lockout, 8
program example, 49
Set Local Status, 8
Set Remote Status, 8
program example, 46
Slave mode, 2, 36

Downloaded from Elcodis.com electronic components distributor

communications functions, 36
program examples, 56
setting in DM Area, 21
specifications
functional, 4
general specifications, 3
SRQ external interrupt
settings in DM area, 23
SRQ indicator
function, 15
SRQ messages
receiving in Master mode, 36
sending in Slave mode, 40
program example, 59
SRQ Received Flag, 26
SRQ Request Bit, 24
standards
IEEE, 2
star configuration, 17
status byte, 24
using the status byte for error processing, 62
system configuration, 1

T

TALK indicator
function, 15
Talker, 2
Talker Specification Received Flag, 26
timeout monitor time
setting in DM Area, 22
transmission data buffer
setting in buffer memory, 27
transmission delimiter
setting in DM Area, 22
troubleshooting, 61

U

unit number
CIO Area word allocation, 23
DM Area word allocation, 20
setting, 18

W

wiring, 16
writing buffer memory data with IOWR(223), 28

Downloaded from Elcodis.com electronic components distributor

Revision History

A manual revision code appears as a suffix to the catalog number on the front cover of the manual.

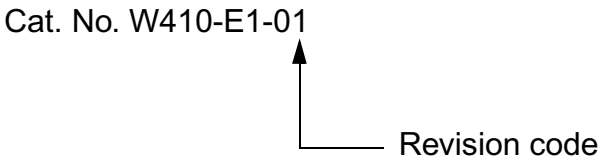

The following table outlines the changes made to the manual during each revision. Page numbers refer to the previous version.

Revision code	Date	Revised content
01	September 2002	Original production

Downloaded from Elcodis.com electronic components distributor

Downloaded from Elcodis.com electronic components distributor

Terms and Conditions of Sale

1. Offer; Acceptance. These terms and conditions (these "Terms") are deemed part of all quotes, agreements, purchase orders, acknowledgments, price lists, catalogs, manuals, brochures and other documents, whether electronic or in writing, relating to the sale of products or services (collectively, the "Products") by Omron Electronics LLC and its subsidiary companies ("Omron"). Omron objects to any terms or conditions proposed in Buyer's purchase order or other documents which are inconsistent with, or in addition to, these Terms.
2. Prices; Payment Terms. All prices stated are current, subject to change without notice by Omron. Omron reserves the right to increase or decrease prices on any unshipped portions of outstanding orders. Payments for Products are due net 30 days unless otherwise stated in the invoice.
3. Discounts. Cash discounts, if any, will apply only on the net amount of invoices sent to Buyer after deducting transportation charges, taxes and duties, and will be allowed only if (i) the invoice is paid according to Omron's payment terms and (ii) Buyer has no past due amounts.
4. Interest. Omron, at its option, may charge Buyer 1-1/2% interest per month or the maximum legal rate, whichever is less, on any balance not paid within the stated terms.
5. Orders. Omron will accept no order less than $200 net billing.
6. Governmental Approvals. Buyer shall be responsible for, and shall bear all costs involved in, obtaining any government approvals required for the importation or sale of the Products.
7. Taxes. All taxes, duties and other governmental charges (other than general real property and income taxes), including any interest or penalties thereon, imposed directly or indirectly on Omron or required to be collected directly or indirectly by Omron for the manufacture, production, sale, delivery, importation, consumption or use of the Products sold hereunder (including customs duties and sales, excise, use, turnover and license taxes) shall be charged to and remitted by Buyer to Omron.
8. Financial. If the financial position of Buyer at any time becomes unsatisfactory to Omron, Omron reserves the right to stop shipments or require satisfactory security or payment in advance. If Buyer fails to make payment or otherwise comply with these Terms or any related agreement, Omron may (without liability and in addition to other remedies) cancel any unshipped portion of Products sold hereunder and stop any Products in transit until Buyer pays all amounts, including amounts payable hereunder, whether or not then due, which are owing to it by Buyer. Buyer shall in any event remain liable for all unpaid accounts.
9. Cancellation; Etc. Orders are not subject to rescheduling or cancellation unless Buyer indemnifies Omron against all related costs or expenses.
10. Force Majeure. Omron shall not be liable for any delay or failure in delivery resulting from causes beyond its control, including earthquakes, fires, floods, strikes or other labor disputes, shortage of labor or materials, accidents to machinery, acts of sabotage, riots, delay in or lack of transportation or the requirements of any government authority.
11. Shipping; Delivery. Unless otherwise expressly agreed in writing by Omron:
    a. Shipments shall be by a carrier selected by Omron; Omron will not drop ship except in "break down" situations.
    b. Such carrier shall act as the agent of Buyer and delivery to such carrier shall constitute delivery to Buyer;
    c. All sales and shipments of Products shall be FOB shipping point (unless otherwise stated in writing by Omron), at which point title and risk of loss shall pass from Omron to Buyer; provided that Omron shall retain a security interest in the Products until the full purchase price is paid;
    d. Delivery and shipping dates are estimates only; and
    e. Omron will package Products as it deems proper for protection against normal handling and extra charges apply to special conditions.
12. Claims. Any claim by Buyer against Omron for shortage or damage to the Products occurring before delivery to the carrier must be presented in writing to Omron within 30 days of receipt of shipment and include the original transportation bill signed by the carrier noting that the carrier received the Products from Omron in the condition claimed.
13. Warranties. (a) Exclusive Warranty. Omron's exclusive warranty is that the Products will be free from defects in materials and workmanship for a period of twelve months from the date of sale by Omron (or such other period expressed in writing by Omron). Omron disclaims all other warranties, express or implied. (b) Limitations. OMRON MAKES NO WARRANTY OR REPRESENTATION, EXPRESS OR IMPLIED, ABOUT NON-INFRINGEMENT, MERCHANTABILITY OR FITNESS FOR A PARTICULAR PURPOSE OF THE PRODUCTS. BUYER ACKNOWLEDGES THAT IT ALONE HAS DETERMINED THAT THE PRODUCTS WILL SUITABLY MEET THE REQUIREMENTS OF THEIR INTENDED USE. Omron further disclaims all warranties and responsibility of any type for claims or expenses based on infringement by the Products or otherwise of any intellectual property right. (c) Buyer Remedy. Omron's sole obligation hereunder shall be, at Omron's election, to (i) replace (in the form originally shipped with Buyer responsible for labor charges for removal or replacement thereof) the non-complying Product, (ii) repair the non-complying Product, or (iii) repay or credit Buyer an amount equal to the purchase price of the non-complying Product; provided that in no event shall Omron be responsible for warranty, repair, indemnity or any other claims or expenses regarding the Products unless Omron's analysis confirms that the Products were properly handled, stored, installed and maintained and not subject to contamination, abuse, misuse or inappropriate modification. Return of any Products by Buyer must be approved in writing by Omron before shipment. Omron Companies shall not be liable for the suitability or unsuitability or the results from the use of Products in combination with any electrical or electronic components, circuits, system assemblies or any other materials or substances or environments. Any advice, recommendations or information given orally or in writing, are not to be construed as an amendment or addition to the above warranty. See http://oeweb.omron.com or contact your Omron representative for published information.
14. Limitation on Liability; Etc. OMRON COMPANIES SHALL NOT BE LIABLE FOR SPECIAL, INDIRECT, INCIDENTAL, OR CONSEQUENTIAL DAMAGES, LOSS OF PROFITS OR PRODUCTION OR COMMERCIAL LOSS IN ANY WAY CONNECTED WITH THE PRODUCTS, WHETHER SUCH CLAIM IS BASED IN CONTRACT, WARRANTY, NEGLIGENCE OR STRICT LIABILITY. Further, in no event shall liability of Omron Companies exceed the individual price of the Product on which liability is asserted.
15. Indemnities. Buyer shall indemnify and hold harmless Omron Companies and their employees from and against all liabilities, losses, claims, costs and expenses (including attorney's fees and expenses) related to any claim, investigation, litigation or proceeding (whether or not Omron is a party) which arises or is alleged to arise from Buyer's acts or omissions under these Terms or in any way with respect to the Products. Without limiting the foregoing, Buyer (at its own expense) shall indemnify and hold harmless Omron and defend or settle any action brought against such Companies to the extent based on a claim that any Product made to Buyer specifications infringed intellectual property rights of another party.
16. Property; Confidentiality. Any intellectual property in the Products is the exclusive property of Omron Companies and Buyer shall not attempt to duplicate it in any way without the written permission of Omron. Notwithstanding any charges to Buyer for engineering or tooling, all engineering and tooling shall remain the exclusive property of Omron. All information and materials supplied by Omron to Buyer relating to the Products are confidential and proprietary, and Buyer shall limit distribution thereof to its trusted employees and strictly prevent disclosure to any third party.
17. Export Controls. Buyer shall comply with all applicable laws, regulations and licenses regarding (i) export of products or information; (iii) sale of products to "forbidden" or other proscribed persons; and (ii) disclosure to non-citizens of regulated technology or information.
18. Miscellaneous. (a) Waiver. No failure or delay by Omron in exercising any right and no course of dealing between Buyer and Omron shall operate as a waiver of rights by Omron. (b) Assignment. Buyer may not assign its rights hereunder without Omron's written consent. (c) Law. These Terms are governed by the law of the jurisdiction of the home office of the Omron company from which Buyer is purchasing the Products (without regard to conflict of law principles). (d) Amendment. These Terms constitute the entire agreement between Buyer and Omron relating to the Products, and no provision may be changed or waived unless in writing signed by the parties. (e) Severability. If any provision hereof is rendered ineffective or invalid, such provision shall not invalidate any other provision. (f) Setoff. Buyer shall have no right to set off any amounts against the amount owing in respect of this invoice. (g) Definitions. As used herein, "including" means "including without limitation"; and "Omron Companies" (or similar words) mean Omron Corporation and any direct or indirect subsidiary or affiliate thereof.

Certain Precautions on Specifications and Use

1. Suitability of Use. Omron Companies shall not be responsible for conformity with any standards, codes or regulations which apply to the combination of the Product in the Buyer's application or use of the Product. At Buyer's request, Omron will provide applicable third party certification documents identifying ratings and limitations of use which apply to the Product. This information by itself is not sufficient for a complete determination of the suitability of the Product in combination with the end product, machine, system, or other application or use. Buyer shall be solely responsible for determining appropriateness of the particular Product with respect to Buyer's application, product or system. Buyer shall take application responsibility in all cases but the following is a non-exhaustive list of applications for which particular attention must be given:
   (i) Outdoor use, uses involving potential chemical contamination or electrical interference, or conditions or uses not described in this document.
   (ii) Use in consumer products or any use in significant quantities.
   (iii) Energy control systems, combustion systems, railroad systems, aviation systems, medical equipment, amusement machines, vehicles, safety equipment, and installations subject to separate industry or government regulations.
   (iv) Systems, machines and equipment that could present a risk to life or property. Please know and observe all prohibitions of use applicable to this Product.
   NEVER USE THE PRODUCT FOR AN APPLICATION INVOLVING SERIOUS RISK TO LIFE OR PROPERTY OR IN LARGE QUANTITIES WITHOUT ENSURING THAT THE SYSTEM AS A WHOLE HAS BEEN DESIGNED TO ADDRESS THE RISKS, AND THAT THE OMRON'S PRODUCT IS PROPERLY RATED AND INSTALLED FOR THE INTENDED USE WITHIN THE OVERALL EQUIPMENT OR SYSTEM.
2. Programmable Products. Omron Companies shall not be responsible for the user's programming of a programmable Product, or any consequence thereof.
3. Performance Data. Data presented in Omron Company websites, catalogs and other materials is provided as a guide for the user in determining suitability and does not constitute a warranty. It may represent the result of Omron's test conditions, and the user must correlate it to actual application requirements. Actual performance is subject to the Omron's Warranty and Limitations of Liability.
4. Change in Specifications. Product specifications and accessories may be changed at any time based on improvements and other reasons. It is our practice to change part numbers when published ratings or features are changed, or when significant construction changes are made. However, some specifications of the Product may be changed without any notice. When in doubt, special part numbers may be assigned to fix or establish key specifications for your application. Please consult with your Omron's representative at any time to confirm actual specifications of purchased Product.
5. Errors and Omissions. Information presented by Omron Companies has been checked and is believed to be accurate; however, no responsibility is assumed for clerical, typographical or proofreading errors or omissions.

Downloaded from Elcodis.com electronic components distributor

OMRON

OMRON ELECTRONICS LLC

1 Commerce Drive
Schaumburg, IL 60173
847.843.7900
For US technical support or
other inquiries: 800.556.6766

OMRON CANADA, INC.

885 Milner Avenue
Toronto, Ontario M1B 5V8
416.286.6465

OMRON ON-LINE

Global - http://www.omron.com
USA - http://www.omron.com/oei
Canada - http://www.omron.ca

UNITED STATES

To locate a Regional Sales Office, local Distributor or to obtain product information, call: 847.843.7900

CANADA REGIONAL SALES OFFICES

Ontario	Toronto	416.286.6465
	Kitchener	519.896.1144
	Kingston	613.376.3968
Quebec	Montreal	514.636.6676
British Columbia	Vancouver	604.522.8855
Alberta	Edmonton	403.440.0818
	Calgary	403.257.3095

BRAZIL SALES OFFICE

Sao Paulo	55.11.5564.6488

ARGENTINA SALES OFFICE

Cono Sur	54.114.787.1129

MEXICO SALES OFFICES

Florida	954.227.2121	**Ciudad Juarez**	656.623.7083
Mexico, D.F.	555.534.1195	**Monterrey, N.L.**	818.377.4281

W410-E1-01 6/06

©2006 OMRON ELECTRONICS LLC
Printed in the U.S.A.

Specifications subject to change without notice.

Downloaded from Elcodis.com electronic components distributor