NTC SMD Thermistors

With Nickel Barrier Termination NB 12 - NB 20

Chip thermistors are high quality and low cost devices especially developed for surface mounting applications. They are widely used for temperature compensation but can also achieve temperature control of printed circuits.

A nickel barrier metallization provides outstanding qualities of solderability and enables this chip to meet the requirements of the most severe soldering processes.

Types	NB 12 IEC SIZE : 0805	NB 20 IEC SIZE : 1206
DIMENSIONS: **millimeters (inches)**	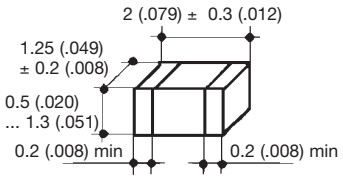	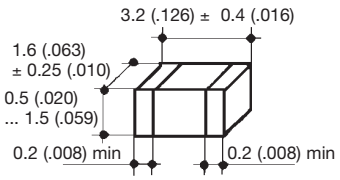
Terminations	Nickel Barrier	
Marking	On packaging only	
Climatic category	40/125/56	
Operating temperature	-55°C to +150°C	
Tolerance on Rn (25°C)	±5%, ±10%, ±20%	
Maximum dissipation at 25°C	0.12 W	0.24 W
Thermal dissipation factor	2 mW/°C	4 mW/°C
Thermal time constant	5 s	7s

Resistance - Temperature characteristics: pages 36 to 40.

APPLICATIONS

- LCD compensation
- Battery packs
- Mobile phones
- CD players
- Heating systems
- Air-conditioning systems
- Temperature control of Switch Mode Power Supplies
- Compensation of pressure sensors
- Protection of power transistors in various electronic circuits

HOW TO ORDER

NB 20	K 0	0103	M	BA
Type	**Material Code** K (See tables page 13)	**Resistance** 10,000 Ω	**Tolerance** M (±20%) J (±5%) K (±10%)	**Suffix: Packaging** – –: Bulk BA: Plastic tape (180mm diam. reel) BE: Plastic tape (1/2 reel) BC: Plastic tape (330mm diam. reel) BB: Cardboard tape (180mm diam. reel) BF: Cardboard tape (1/2 reel) BD: Cardboard tape (330mm diam. reel)

Downloaded from Elcodis.com electronic components distributor

TABLE OF VALUES

NB 12 IEC SIZE : 0805				
Types	Rn at 25°C (Ω)	Material Code	B (K) (ΔB/B (1) ± 5% (2) ± 3%)	α at 25°C (%/°C)
NB 12 KC 0 180 NB 12 KC 0 220 NB 12 KC 0 270 NB 12 KC 0 330 NB 12 KC 0 390 NB 12 KC 0 470 NB 12 KC 0 560 NB 12 KC 0 680 NB 12 KC 0 820 NB 12 KC 0 101	18 22 27 33 39 47 56 68 82 100	KC	3470 ± 5%	– 3.9
NB 12 MC 0 121 NB 12 MC 0 151 NB 12 MC 0 181 NB 12 MC 0 221 NB 12 MC 0 271 NB 12 MC 0 331 NB 12 MC 0 391 NB 12 MC 0 471 NB 12 MC 0 561 NB 12 MC 0 681 NB 12 MC 0 821 NB 12 MC 0 102 NB 12 MC 0 122 NB 12 MC 0 152 NB 12 MC 0 182 NB 12 MC 0 222 NB 12 MC 0 272 NB 12 MC 0 332	120 150 180 220 270 330 390 470 560 680 820 1,000 1,200 1,500 1,800 2,200 2,700 3,300	MC	3910 ± 3%	– 4.4
NB 12 J 0 0332 NB 12 J 0 0392 NB 12 J 0 0472 NB 12 J 0 0562	3,300 3,900 4,700 5,600	J	3480 ± 3%	– 3.9
NB 12 K 0 0682 NB 12 K 0 0822 NB 12 K 0 0103	6,800 8,200 10,000	K	3630 ± 3%	– 4.0
NB 12 L 0 0123 NB 12 L 0 0153	12,000 15,000	L	3790 ± 3%	– 4.2
NB 12 M 0 0183 NB 12 M 0 0223 NB 12 M 0 0273 NB 12 M 0 0333	18,000 22,000 27,000 33,000	M	3950 ± 3%	– 4.4
NB 12 N 0 0393 NB 12 N 0 0473 NB 12 N 0 0563	39,000 47,000 56,000	N	4080 ± 3%	– 4.6
NB 12 L 2 0683	68,000	L2	3805 ± 3%	– 4.1
NB 12 N 5 0683 NB 12 N 5 0823	68,000 82,000	N5	4160 ± 3%	– 4.7
NB 12 P 0 0104	100,000	P	4220 ± 3%	– 4.7
NB 12 SC 0104	100,000	SC	4500 ± 3%	– 4.8
NB 12 P 0 0124 NB 12 P 0 0154 NB 12 P 0 0184	120,000 150,000 180,000	P	4220 ± 3%	– 4.7
NB 12 Q 0 0224 NB 12 Q 0 0274	220,000 270,000	Q	4300 ± 3%	– 4.7
NB 12 R 0 0105	1,000,000	R	4400 ± 3%	– 4.8

NB 20 IEC SIZE : 1206				
Types	Rn at 25°C (Ω)	Material Code	B (K) (ΔB/B (1) ± 5% (2) ± 3%)	α at 25°C (%/°C)
NB 20 MC 0 221 NB 20 MC 0 102	220 1,000	MC MC	3910 ± 3% 3910 ± 3%	– 4.4 – 4.4
NB 20 J 0 0472 NB 20 J 0 0562 NB 20 J 0 0682	4,700 5,600 6,800	J	3480 ± 3%	– 3.9
NB 20 J 5 0822	8,200	J5	3480 ± 3%	– 3.9
NB 20 K 0 0103 NB 20 K 0 0123	10,000 12,000	K	3630 ± 3%	– 4.0
NB 20 L 0 0153 NB 20 L 0 0183 NB 20 L 0 0223	15,000 18,000 22,000	L	3790 ± 3%	– 4.2
NB 20 M 0 0273 NB 20 M 0 0333 NB 20 M 0 0393 NB 20 M 0 0473	27,000 33,000 39,000 47,000	M	3950 ± 3%	– 4.4
NB 20 N 0 0563 NB 20 N 0 0683 NB 20 N 0 0823	56,000 68,000 82,000	N	4080 ± 3%	– 4.6
NB 20 N 5 0104	100,000	N5	4160 ± 3%	– 4.7
NB 20 P 0 0124 NB 20 P 0 0154 NB 20 P 0 0184 NB 20 P 0 0224	120,000 150,000 180,000 220,000	P	4220 ± 3%	– 4.7
NB 20 Q 0 0274 NB 20 Q 0 0334 NB 20 Q 0 0394 NB 20 Q 0 0474 NB 20 Q 0 0564	270,000 330,000 390,000 470,000 560,000	Q	4300 ± 3%	– 4.7
NB 20 R 0 0684 NB 20 R 0 0824 NB 20 R 0 0105	680,000 820,000 1,000,000	R	4400 ± 3%	– 4.8

Downloaded from Elcodis.com electronic components distributor

Packaging for Automatic Insertion

NTC Chip Thermistors / NC/NB Series

AUTOMATIC INSERTION

Super 8 Plastic Tape Packaging:
The mechanical and dimensional reel characteristics are in accordance with the IEC publication 286-3.

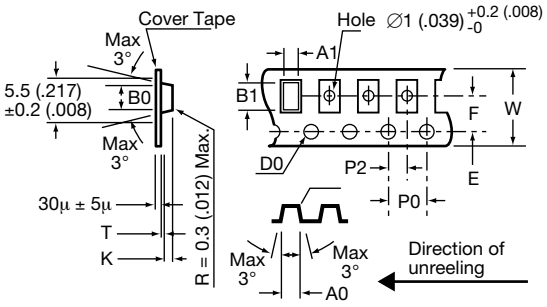

Designation		Symbol	Value	Tolerance
Tape width		W	8	±0.2
Tape thickness		T	0.4 max.	
Pitch of the sprocket holes		P0	4	±0.1
Diameter of the sprocket holes		D0	1.5 -0	±0.1
Distance		E	1.75	±0.1
Distance (center to center)		F	3.5	±0.05
Distance (center to center)		P2	2	±0.1
Sizes of the cavities	NC 12 (0805)	A0	1.5	±0.1
		B0	2.4	±0.1
		K	1.4 max.	K ±0.1 (size is adjustable) (K = t1 +0.2)
	NC 20 (1206)	A0	1.95	±0.1
		B0	3.55	±0.1
		K	1.5 max.	K ±0.1 (size is adjustable) (K = t1 +0.2)

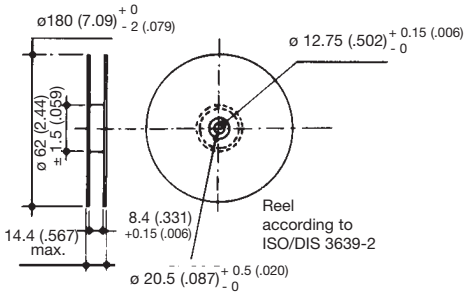

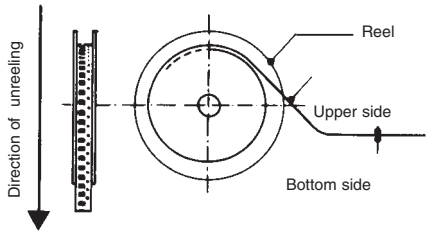

QUANTITY PER REEL

Type	Suffix	Qty Per Reel
NC - NB 12	BA	4000
	BE	2000
NC 20 - NB 20	BA	3000
	BE	1500

Downloaded from Elcodis.com electronic components distributor

Packaging for Automatic Insertion

NTC Chip Thermistors / NC/NB Series

AUTOMATIC INSERTION

8mm Paper Tape Packaging:

The mechanical and dimensional reel characteristics are in accordance with the IEC publication 286-3.

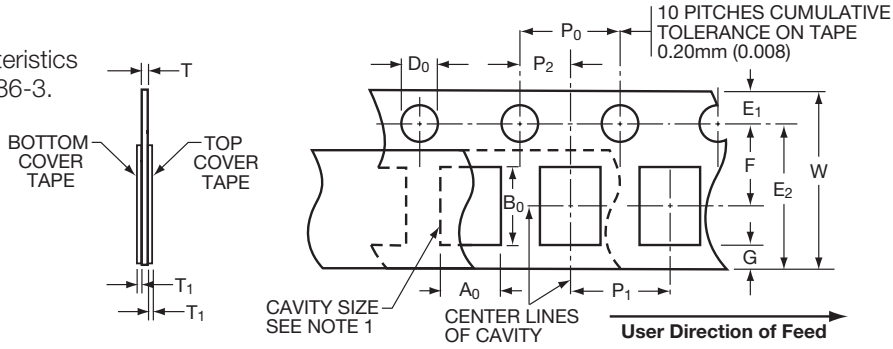

Designation		Symbol	Value	Tolerance
Tape width		W	8	-.0.1/+0.3
Tape thickness		T	1.1 max.	
Pitch of the sprocket holes		P_0	4	±0.1
Diameter of the sprocket holes		D_0	1.5 -0/+0.1	±0.1
Distance		E_1	1.75	±0.1
Distance (center to center)		F	3.5	±0.05
Distance (center to center)		P_2	2	±0.05
Cover tape thickness		T_1	0.10 max.	
Distance		E_2	6.25 min.	
Distance		G	0.75 min.	
Component pitch	0805/0603	P_1	4	±0.1
	0402		2	±0.1

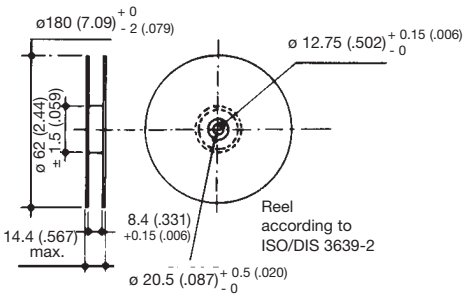

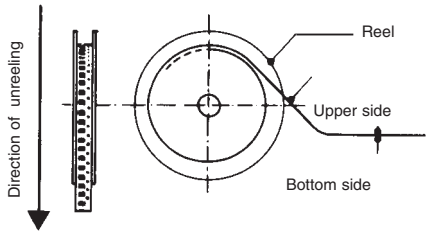

QUANTITY PER REEL

Type	Suffix	Qty Per Reel
NB - NC 12	BB	4000
NB 21	BF	2000
NB 23	BB	10000
	BF	5000

Downloaded from Elcodis.com electronic components distributor

STORAGE

Good solderability is maintained for at least twelve months, provided the components are stored in their "as received" packaging at less than 40°C and 70% RH.

SOLDERABILITY / LEACHING

Terminations to be well soldered after immersion in a 60/40 tin/lead solder bath at 235 ± 5°C for 2 ± 1 seconds.

Terminations will resist leaching for at least the immersion times and conditions recommendations shown below.

P/N	Termination Type	Solder Tin/Lead	Solder Temp °C	Immersion Time Seconds
NC	AgPdPt	60/40	260 ± 5	15 max
NB	Nickel Barrier	60/40	260 ± 5	30 ± 1

NB products are compatible with a wide range of soldering conditions consistent with good manufacturing practice for surface mount components. This includes Pb free reflow processes with peak temperatures up to 270ºC. Recommended profiles for reflow and wave soldering are shown below for reference.

NC products are recommended for lead soldering application or gluing techniques.

Reflow

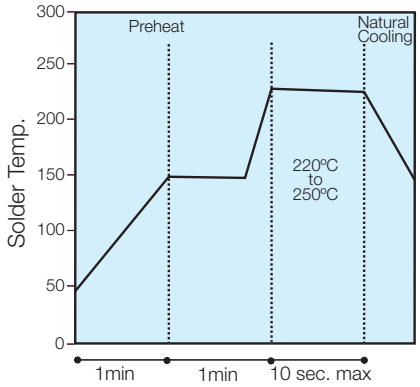

(Minimize soldering time)

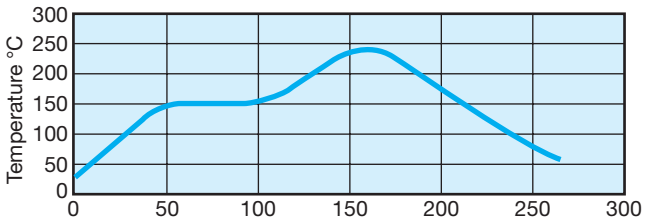

- Pre-heating: 150°C ±15°C / 60-90s
- Max. Peak Gradient: 2.5°C/s
- Peak Temperature: 245°C ±5°C
- Time at >230°C: 40s Max.

Wave

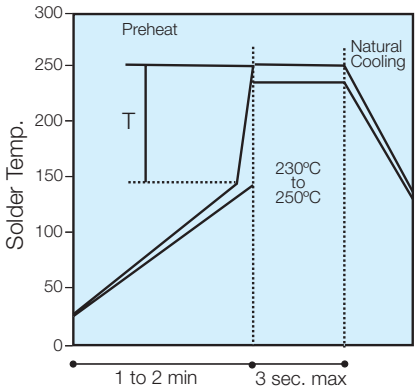

(Preheat chips before soldering)
T/maximum 150°C

a) The visual standards used for evaluation of solder joints will need to be modified as lead free joints are not as bright as with tin-lead pastes and the fillet may not be as large.

b) Resin color may darken slightly due to the increase in temperature required for the new pastes.

c) Lead-free solder pastes do not allow the same self alignment as lead containing systems. Standard mounting pads are acceptable, but machine set up may need to be modified.

RECOMMENDED SOLDERING PAD LAYOUT

Dimensions in mm (inches)

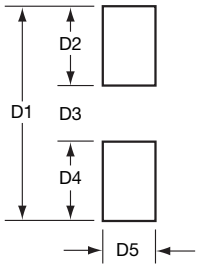

REFLOW SOLDERING

Case Size	P/N	D1	D2	D3	D4	D5
0402	NB23	1.70 (.067)	0.60 (.024)	0.50 (.020)	0.60 (.024)	0.50 (.020)
0603	NB21	2.30 (.091)	0.80 (.031)	0.70 (.028)	0.80 (0.31)	0.75 (.030)
0805	NB12	3.00 (.118)	1.00 (.039)	1.00 (.039)	1.00 (.039)	1.25 (.049)
1206	NB20	4.00 (.157)	1.00 (.039)	2.00 (.079)	1.00 (.039)	2.50 (.098)

WAVE SOLDERING

Case Size	P/N	D1	D2	D3	D4	D5
0603	NB21	3.10 (.122)	1.20 (.047)	0.70 (.028)	1.20 (.047)	0.75 (.030)
0805	NB12	4.00 (.157)	1.50 (.059)	1.00 (.039)	1.50 (.059)	1.25 (.049)
1206	NB20	5.00 (.197)	1.50 (.059)	2.00 (.079)	1.50 (.059)	1.60 (.063)

Downloaded from Elcodis.com electronic components distributor