MICRO SWITCH
FREEPORT ILLINOIS
A DIVISION OF HONEYWELL
FED. MFG. CODE 91928

SWITCH - BASIC

CATALOG LISTING
BZ-2RS-P4

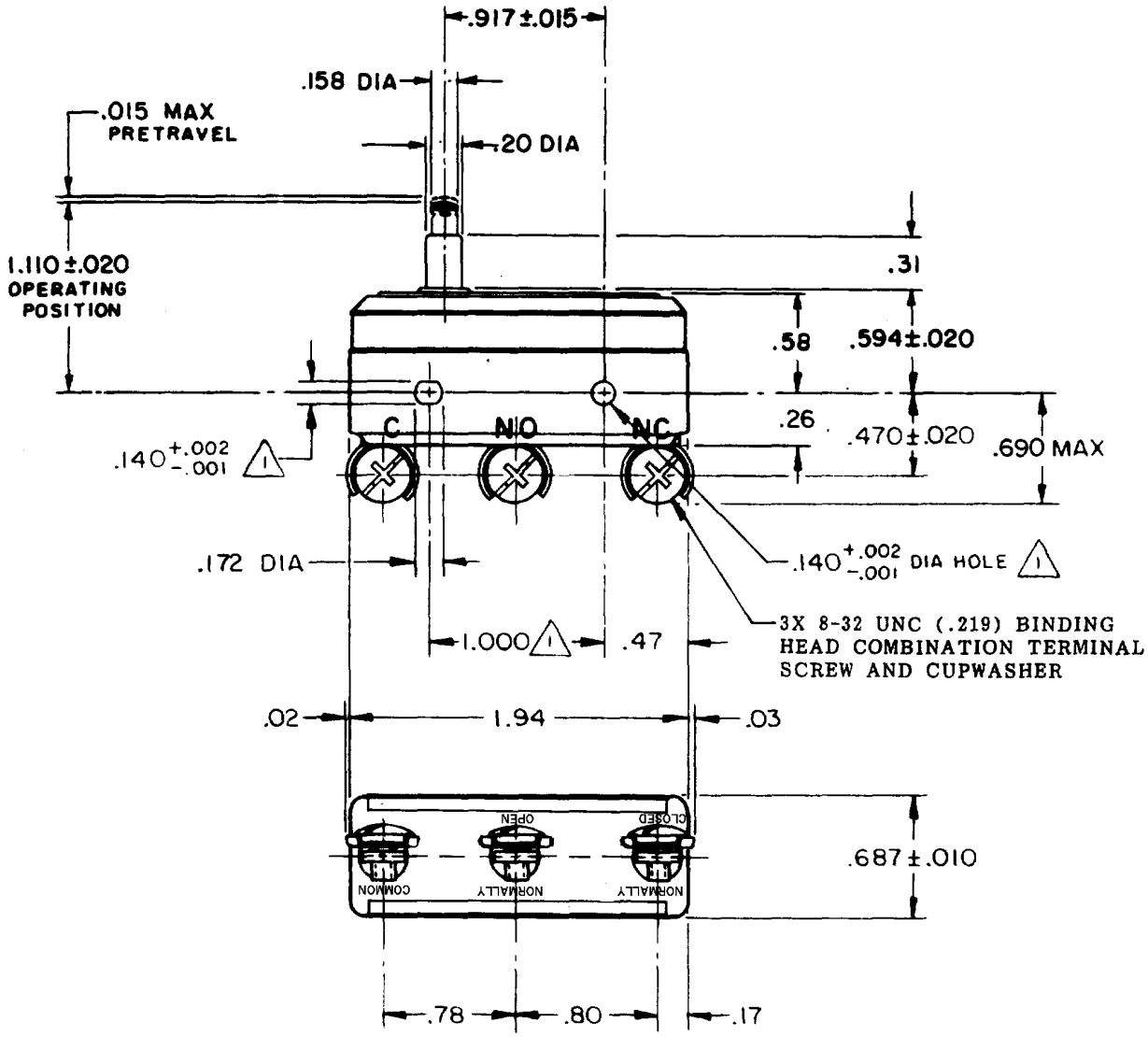

NOTE
1. MOUNTING HOLES WILL ACCEPT PINS OR SCREWS OF .139 MAX DIA ON 1.000±.002 CENTERS

THIS DRAWING COVERS A PROPRIETARY ITEM AND IS THE PROPERTY OF MICRO SWITCH, A DIVISION OF MINNEAPOLIS-HONEYWELL REGULATOR CO. THIS DRAWING IS NOT TO BE COPIED OR USED WITHOUT THE APPROVAL OF MICRO SWITCH.

CHARACTERISTICS

OPERATING FORCE ---------- 9-13 OZ
RELEASE FORCE ----------4 OZ MIN
DIFFERENTIAL TRAVEL ----.0004-.0020
OVERTRAVEL ----------.062 MIN

ELECTRICAL DATA

CONTACT ARRANGEMENT
S P D T

UL LISTED-FILE E12252
CODE L96 15A-125, 250 OR 480 VAC
1/8 HP-125 VAC; 1/4 HP-250 VAC
1/2 A-125 VDC; 1/4 A-250 VDC
L288
L299
L306
16A 250V ~ T85 5E4

SCALE FULL
DO NOT SCALE PRINT

UNLESS OTHERWISE SPECIFIED
DIMENSIONS ARE IN INCHES
TOLERANCES ARE:

ONE PLACE	(.0)	±.030
TWO PLACE	(.00)	±.015
THREE PLACE	(.000)	±.005
ANGLES		±

WEIGHT .075 LB

BZ-2RS-P4
PAGE 1 OF 1
M
DRAWING NUMBER
7
ISSUE
RELEASE NO.
REPLACES
CHECK

REVISIONS

A	C016651	GCH 23 FEB 63
B	C044156	SJS 20 APR 78
C	CO-73257-G	JAT 20 OCT 93
D	CO-75367B	LJF 3 MAR 94
E	CO-77863	GJW 6 MAY 96
F	C093346	DLT 11 SEP 98

DRAWN 5 MAR 63
CHECK
DRAWN 23 FEB 63
CHECK
GCH

FORMTEK
FO-50378

Downloaded from Elcodis.com electronic components distributor