MICRO SWITCH
FREEPORT, ILLINOIS, U.S.A.
A DIVISION OF HONEYWELL
FED. MFG. CODE 91929

SWITCH–BASIC

CATALOG LISTING
BZ–2RW84118–A41
APV7500

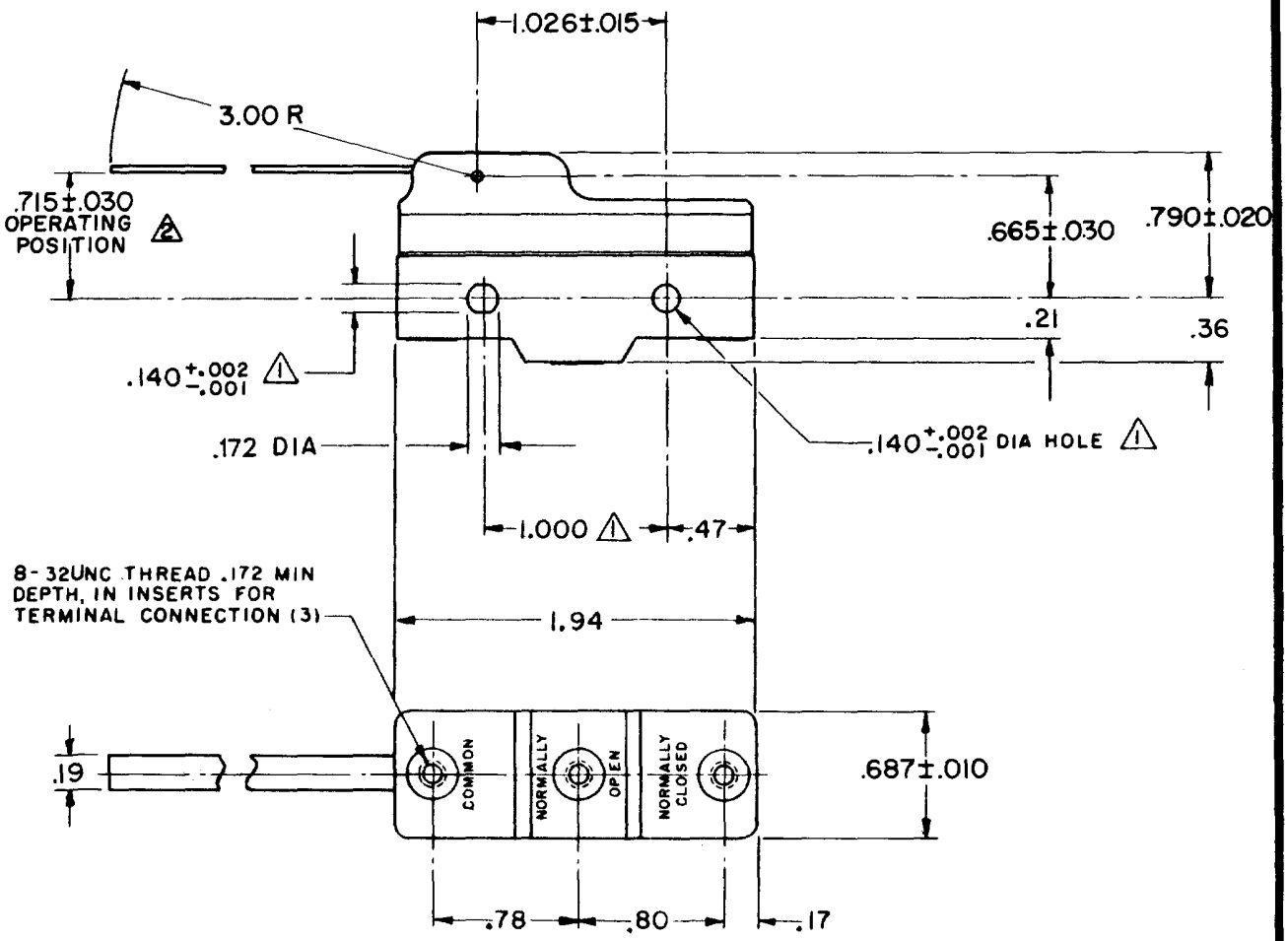

NOTES
1. MOUNTING HOLES WILL ACCEPT PINS OR SCREWS OF .139 MAX DIA ON 1.000 ±.002 CENTERS
2. CHARACTERISTICS MEASURED UPWARD FROM MOUNTING HOLES

THIS DRAWING COVERS A PROPRIETARY ITEM AND IS THE PROPERTY OF MICRO SWITCH, A DIVISION OF MINNEAPOLIS-HONEYWELL REGULATOR CO. THIS DRAWING IS NOT TO BE COPIED OR USED WITHOUT THE APPROVAL OF MICRO SWITCH.

CHARACTERISTICS 2

OPERATING FORCE — 1 OZ MAX
RELEASE FORCE — 1/8 OZ APPROX
DIFFERENTIAL TRAVEL — .009–.060
OVERTRAVEL — .266 MIN

ELECTRICAL DATA

CONTACT ARRANGEMENT
S P D T

-L96- 15 A-125, 250, OR 480 VAC
1/2 A-125 VDC; 1/4 A-250 VDC
1/8 HP-125 VAC, 1/4 HP-250 VAC

-L288-
-L315-
-L306-

16A 250V ~ T85 5E4

SCALE FULL
DO NOT SCALE PRINT

UNLESS OTHERWISE NOTED
DIMENSIONS ARE IN INCHES
TOLERANCES ARE:

ONE PLACE	(.0)	±.030
TWO PLACE	(.00)	±.015
THREE PLACE	(.000)	±.005
ANGLES		±½°

WEIGHT .073 LB

M BZ-2RW84118-A41 PAGE 1 OF 1
DRAWING NUMBER
RELEASE NO.
REPLACES
ISSUE 6 X

REVISIONS
A C017262 LEB 4 OCT 63
B CO-17588 KDR 29 MAR 91
C C093346 DLT 17 SEP 98
D 0017579 KRB 08DEC05

DRAWN LEB 4 OCT 63
CHECK RJ 08DEC05
PAM 8 OCT 63
CHECK KRB 08DEC05

FORMTEK
FO-50378

Downloaded from Elcodis.com electronic components distributor