MICRO SWITCH
a Honeywell Division
FED.MFG.CODE 91929

SWITCH - BASIC

CATALOG LISTING
BZ-R

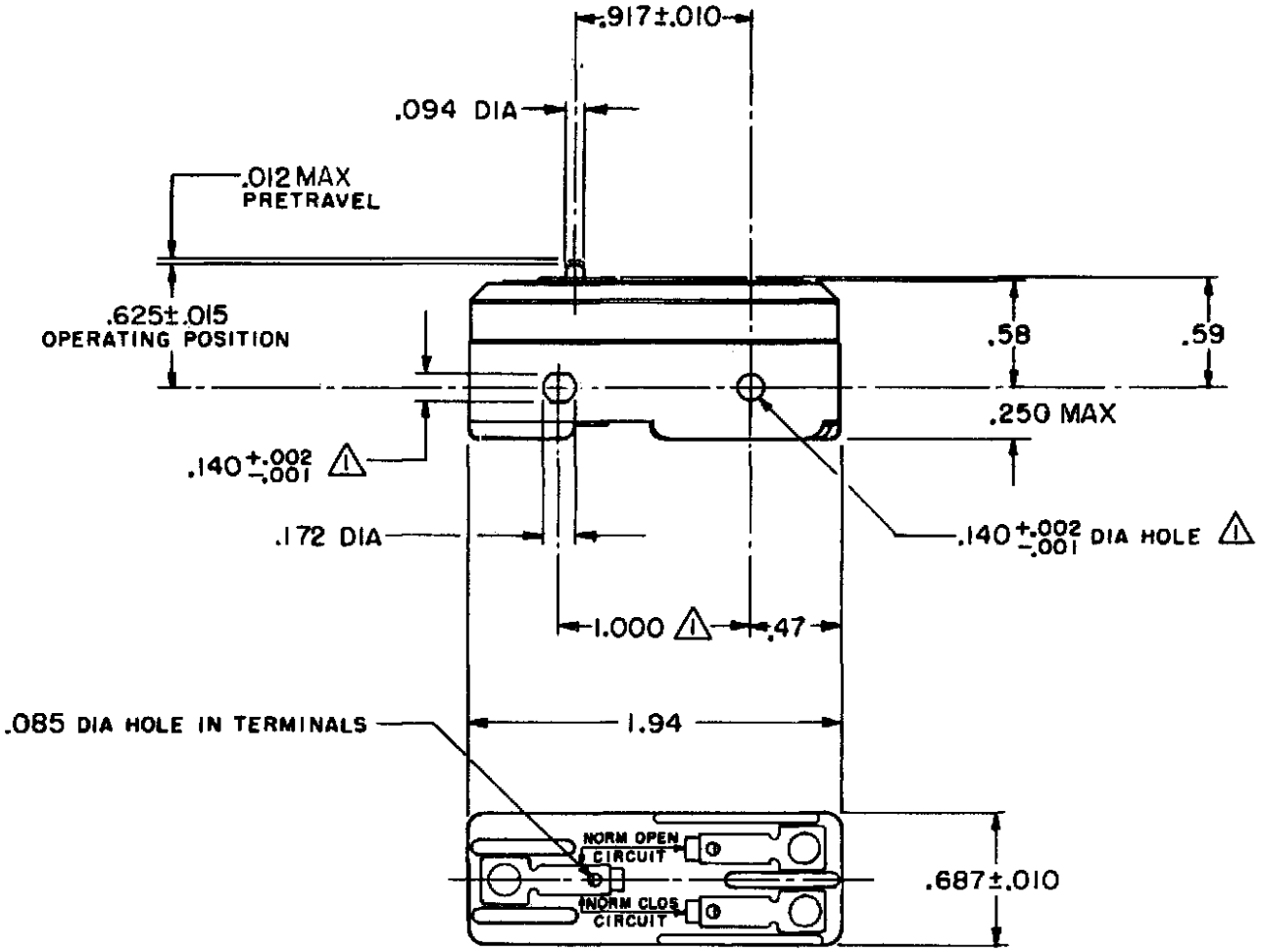

NOTE
1. MOUNTING HOLES WILL ACCEPT PINS OR SCREWS ON .139 MAXIMUM DIAMETER ON 1.000±.002 CENTERS

THIS DRAWING COVERS A PROPRIETARY ITEM AND IS THE PROPERTY OF MICRO SWITCH, A DIVISION OF HONEYWELL. THIS DRAWING IS NOT TO BE COPIED OR USED WITHOUT THE APPROVAL OF MICRO SWITCH.

THIRD ANGLE PROJECTION

CHARACTERISTICS	ELECTRICAL DATA	SCALE FULL — DO NOT SCALE PRINT
OPERATING FORCE - - - - - - - - 7 - 9 OZ	CONTACT ARRANGEMENT	UNLESS OTHERWISE SPECIFIED TOLERANCES ARE
RELEASE FORCE - - - - - - - - - 4 OZ MIN	L103 15A 125, 250 OR 480 VAC	ONE PLACE (.0) ±.030
DIFFERENTIAL TRAVEL - - .00020-.00035	1/8HP 125 VAC, 1/4HP 250 VAC	TWO PLACE (.00) ±.015
OVERTRAVEL - - - - - - - - - - - .005 MIN		THREE PLACE (.000) ±.005
		ANGLES ±
		WEIGHT .05 LB

CATALOG LISTING BZ-R PAGE 1 OF 1
ISSUE 16

REVISIONS
A CO-94212-J J J A 4 OCT 99

REPLACES	RELEASE NO.	CHECK	CHECK	CHECK	CHECK
				S A V	4 OCT 99

DRAWN J J A 4 OCT 99
FORMTEK

Downloaded from Elcodis.com electronic components distributor