MICRO SWITCH
A DIVISION OF MINNEAPOLIS-HONEYWELL REGULATOR COMPANY
FREEPORT, ILLINOIS
FED. MFR. CODE 91929

SWITCH – BASIC

CATALOG LISTING
BA-2R708-P7

ABH2500

JG03349

(M) BA-2R708-P7 ISSUE 1

REPLACES

RELEASE NO.

20FEB06

RJ

CHECK

CATALOG LISTING
BA-2R708-P7
PAGE 1 OF 1

M

ISSUE 10

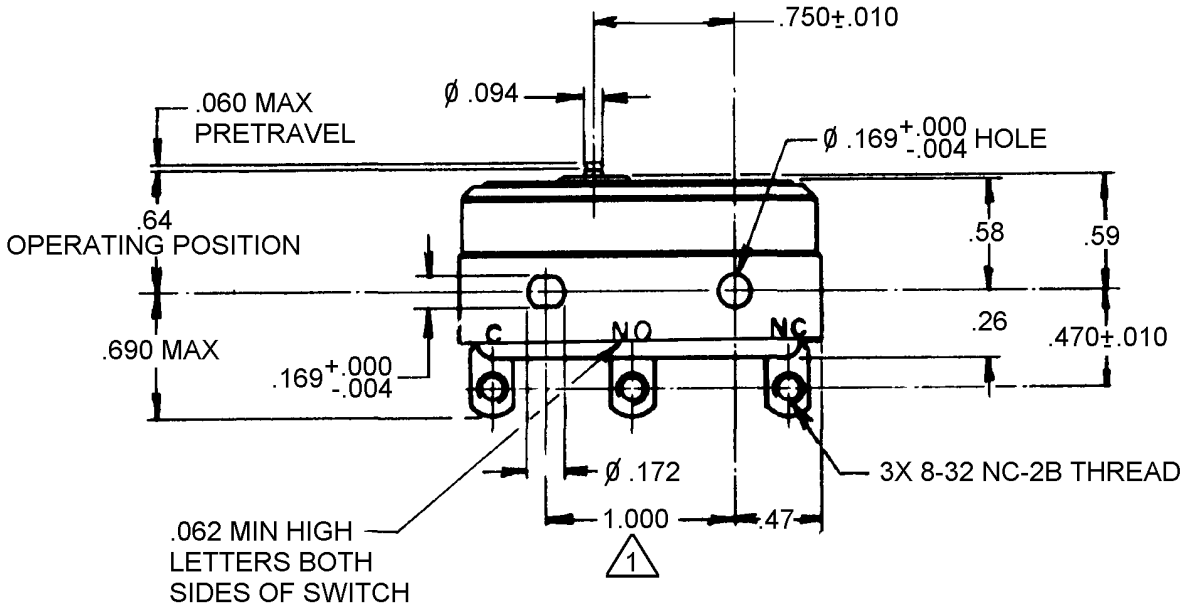

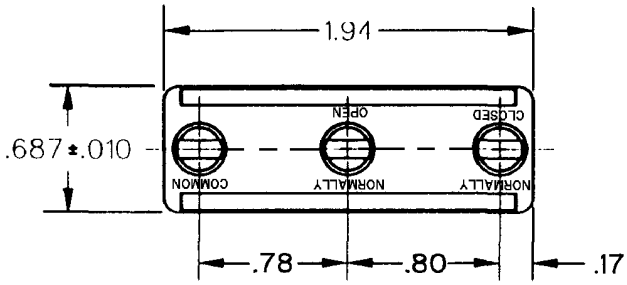

NOTE
1 MOUNTING HOLES WILL ACCEPT PINS OR SCREWS OF Ø .165 MAX ON 1.000±.002 CENTERS

ANSI Y14.5M–1982 APPLIES

REVISIONS

A	C011431	K.F.M. 24 APR.57
B	C020748	WEB 2 NOV 65
C	C065429	JAP 4 APR 90
D	CO-753678	SAV 3 MAR 94
E	C081374	GJW 6 NOV 95
F	CO-77863	GJW 8 MAY 96
G	C093346	DLT 22 AUG 98
H	204986	CSL 27 FEB 02
J	0018656	NM 20FEB06

CHECK

24 APR.57

CHECK

CHECK

RASTER

DRAWN K.F.M. 24 APR.57

THIS DRAWING COVERS A PROPRIETARY ITEM AND IS THE PROPERTY OF MICRO SWITCH, A DIVISION OF HONEYWELL. THIS DRAWING IS NOT TO BE COPIED OR USED WITHOUT THE APPROVAL OF MICRO SWITCH.

CHARACTERISTICS

OPERATING FORCE – – – – 14-22 OZ.

RELEASE FORCE – – – – 10 OZ. MIN.

DIFFERENTIAL TRAVEL – – –.002 – .0075

OVERTRAVEL – – – – – – .010 MIN

ELECTRICAL DATA

CONTACT ARRANGEMENT
S.P.D.T.

L23
20A 125, 250 OR 480 VAC
10A 125 VAC "L"
1HP 125 VAC, 2HP 250 VAC
1/2A 125 VDC, 1/4A 250 VDC

L288
L308
L315
20(3)A 250V ~ T85 5E4

SCALE FULL

DO NOT SCALE PRINT

UNLESS OTHERWISE SPECIFIED
DIMENSIONS ARE IN INCHES

TOLERANCES ARE:

ONE PLACE	(.0)	±.030
TWO PLACE	(.00)	±.015
THREE PLACE	(.000)	±.005
ANGLES		±

WEIGHT .075 LB.

Downloaded from Elcodis.com electronic components distributor